IXYS

Efficiency Through Technology

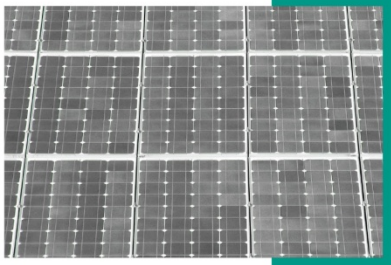

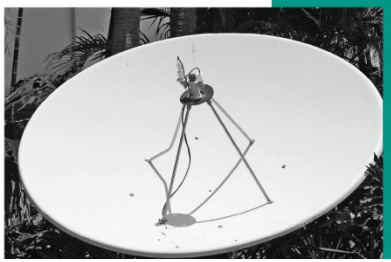

IXYS UK Westcode Limited

Press-pack IGBT, towards the next generation of super switch

24th June 2014

PE Event Delft

Press-pack IGBT an Introduction

- First commercial products introduced by IXYS Uk (Westcode) in 1998
  - 1.8kV High frequency aimed at induction heating
    - Single frame die carrier 47mm & 75mm electrode diameter rated up to 1200A
- Following interest from Traction companies 2.5kV & 4.5kV devices launched in 2000
  - Based on new single die sub-cell
    - Round package established as standard after square packages abandoned due to cost
  - Combatable products available from Toshiba (round package) & Fuji (square package)
- 2nd & 3rd generation 4.5kV die introduced in 2004 & 2008 respectively
- 125mm electrode diameter package for 4.5kV introduced in 2006
  - Developed with Industry partners for MV-Drives & traction
- First 6.5kV device launched 2014

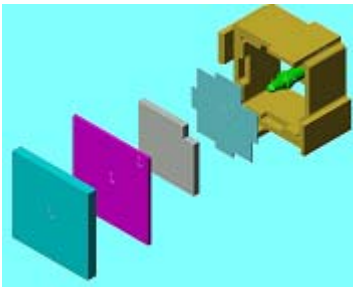

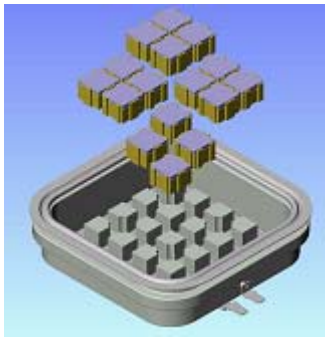

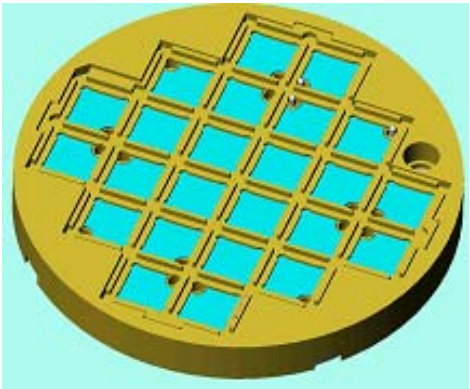

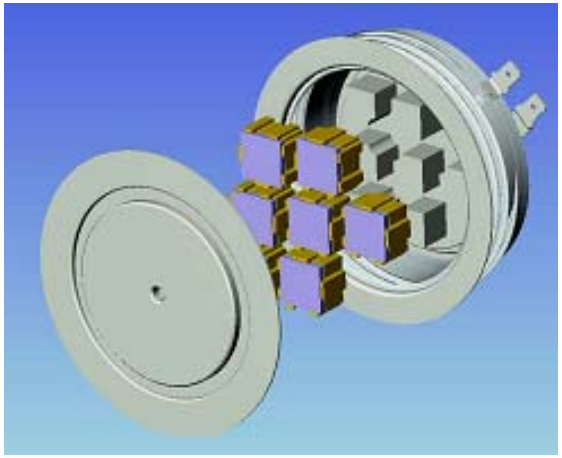

Press-pack IGBT - product status

- Press-pack IGBTs using the established mechanical designs are available up to 4.5KV
- Extension of voltage to 6.5kV in progress

Electrode diameter (mm)	2.5kV IGBT/diode	4.5kV IGBT/diode	6.5kV IGBT/diode	2.5kV IGBT	4.5kV IGBT	6.5kV IGBT
47	360A	160A		500A	240A	
63	570A	340A		850A	510A	
66			258A			385A
75	1200A	600A		1500A	800A	
85		800A			1200A	
90			515A			775A
96				2250A		
110			900A			1375A
125		1600A			2400A	
132			1290A			1890A

Internal construction

- Mechanical design used in all 3rd generation products
- Fully bond free construction
- Common cell structure for each die rating
  - Allows versatility in ratings/package design
- Simple design with minimum component count
  - Limits number of interfaces
- Inter-location of carrier cells
  - Allows maximum die packing density

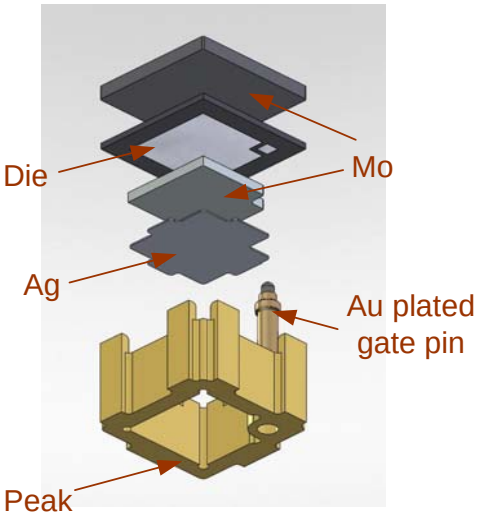

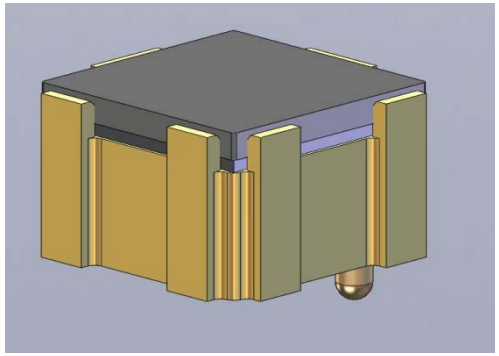

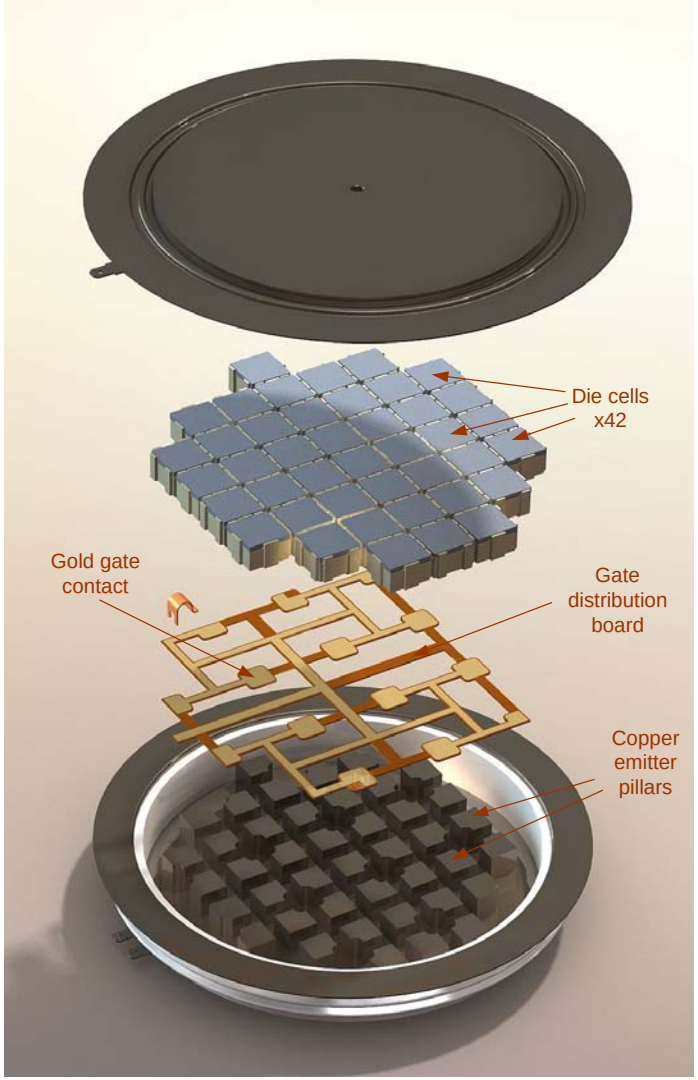

Internal construction

- Internal construction of 125mm pole Press-pack IGBT

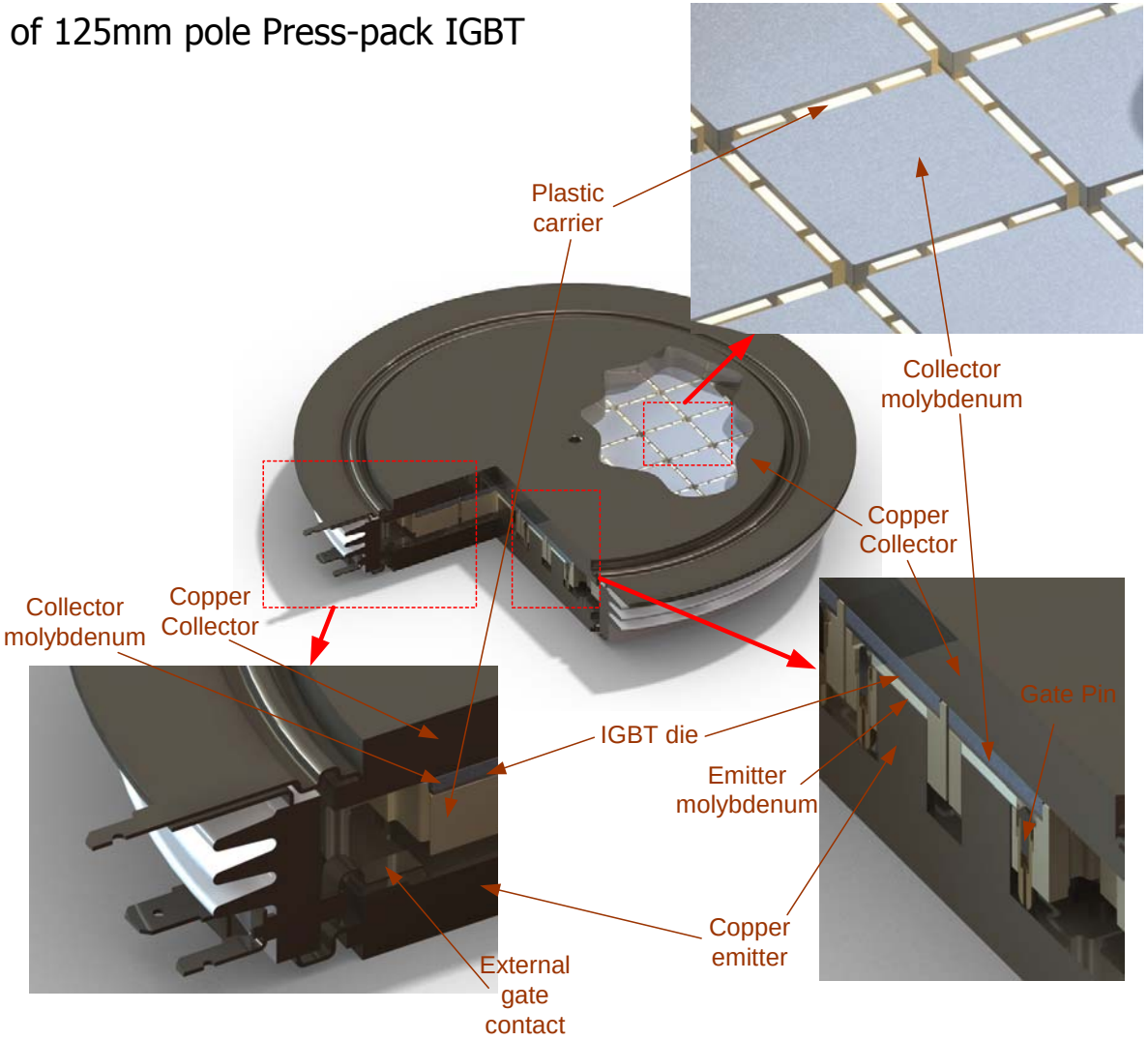

Mechanical construction - compared to module

- Common collector & emitter contacts
  - Identical R & L components to all die
  - Common thermal conditions
- Direct contact to die
  - Open circuit condition not possible

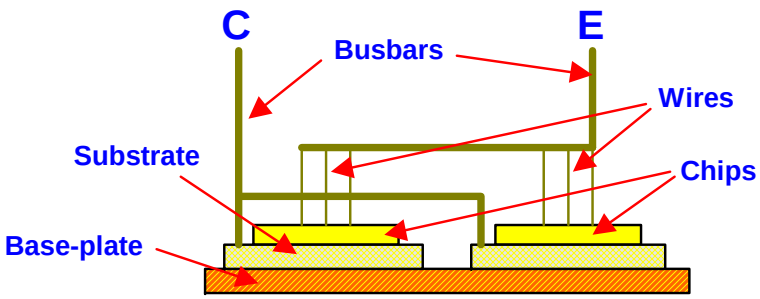

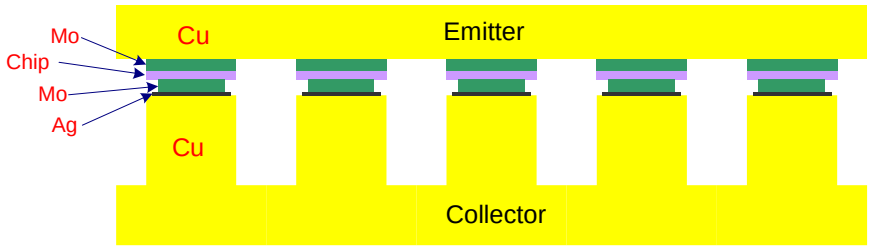

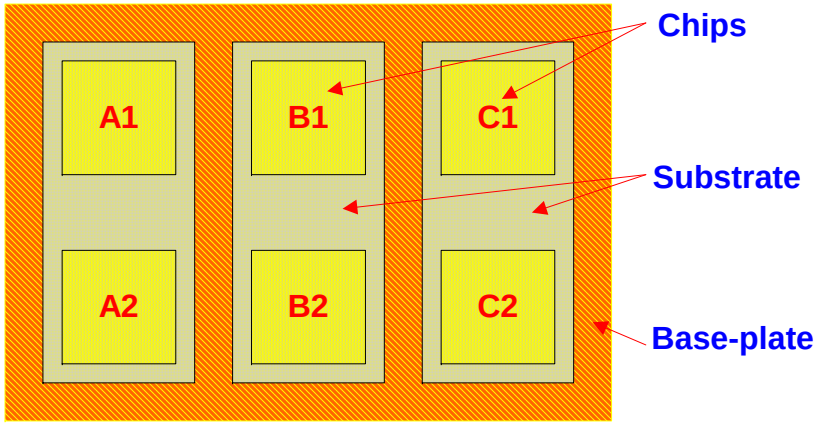

Parasitic Inductance

- Parasitic inductance in press-pack
  - Common value to all die
  - Parasitic inductance 40nH per die
  - In consequence each die will have identical over voltage due to di/dt
- Module Parasitic inductance
  - Higher due to emitter wires length of path to individual die
    - Typically 120nH per die
    - In consequence each die will have higher over voltage due to di/dt
  - Parasitic inductance is not common to all die
    - In consequence die will experience different over voltage due to di/dt
- The same principle applies to series resistance within the package and therefore distribution of current between die

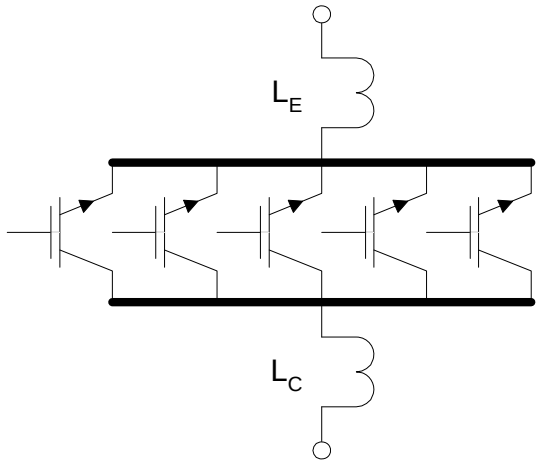

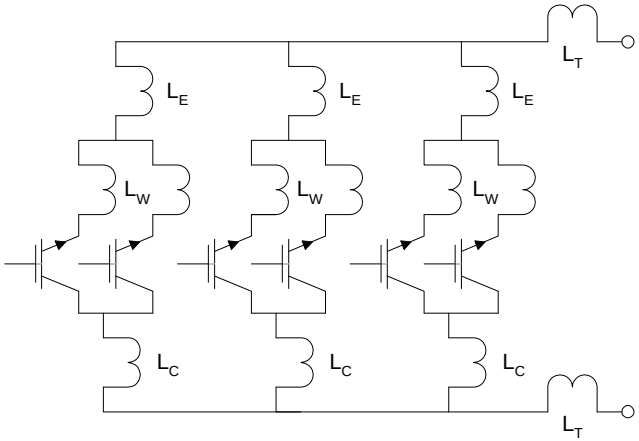

Thermal resistance

- Press-pack IGBT
  - Die is cooled from both sides
  - As with L & R components, thermal resistance is common to all die
  - Die are 'forced' to common temperature
    - The large mass of the collector and emitter electrodes acts as a thermal capacitor
    - Reduces temperature effect variations from the cooling system
- Module
  - Thermal resistance to each die is unique
  - Influenced by the layout of the die
  - Lack of thermal mass allows lateral variations in temperature
  - Non uniformity in both base plate to sink thermal resistance and temperature of heat sink are translated directly to die

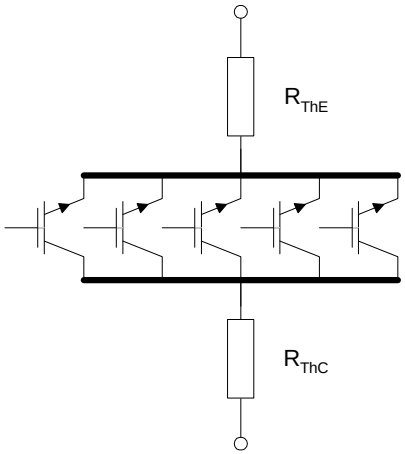

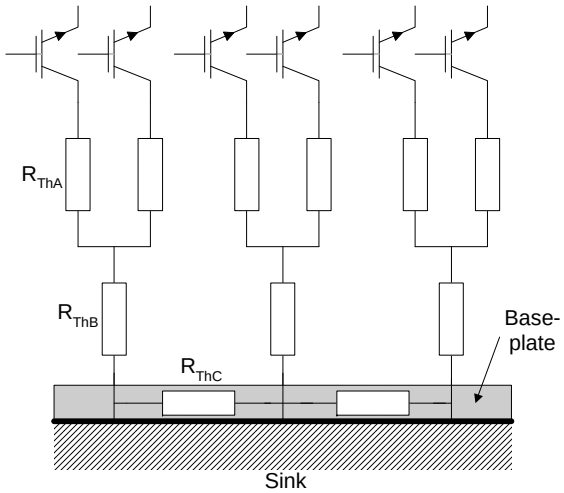

Press-pack IGBT Reliability

- Designed for high reliability
  - No solder or wire bonds
  - Enhanced shock & vibration resistance
  - Enhanced thermal cycling capability
    - Accelerated life test >10^5 cycles @ 135ºC
  - Short circuit failure mode
    - 8000h short circuit stability test completed
    - Allows n+1 redundancy
    - Case rupture unlikely
  - Fully hermetic construction
    - Suitable for all cooling methods
      - Including oil immersion
  - Double side cooling
    - More uniform cooling of active area of die
    - Improved thermal impedance
  - Identical electrical/thermal path to each die
  - Minimal internal parasitic components
    - Insertion inductance 40nH per die

Drop test

Vibration
[Inset: T2400TB45E under test]

Press-pack IGBT reliability – Thermal cycling

- For a press-pack IGBT ΔP_{cu} is small compared to $\Delta r1$ & $\Delta r2$
  - For optimal thermal cycling performance $\Delta r1 = \Delta r2$
- For a Large single die device such as a GTO thyristor, all material expands relative to the centre
  - Movement at the edge of the silicon is at least five times greater than a similar rated PP-IGBT

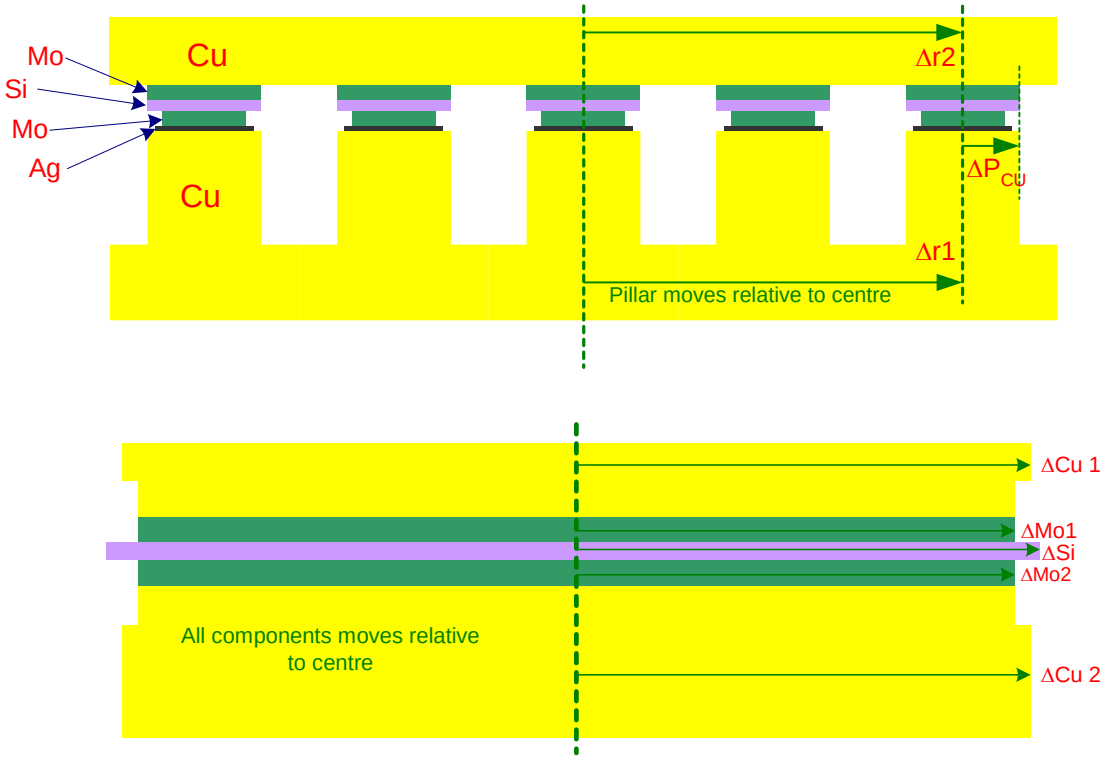

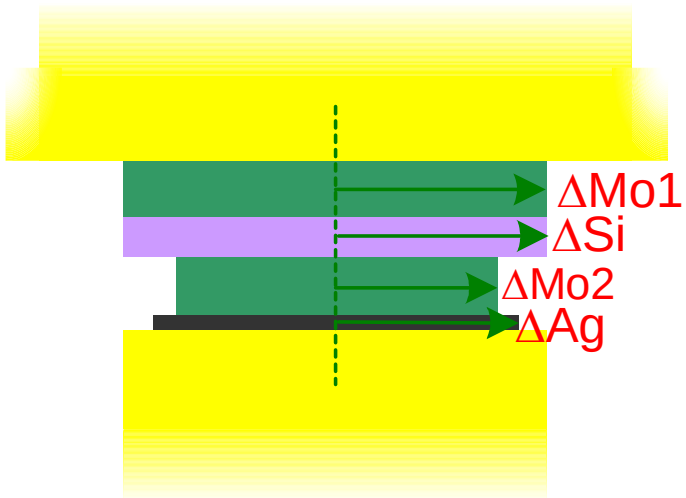

Press-pack IGBT reliability – Thermal cycling

- Examples of completed thermal cycling tests
- Two criteria of test:
  - Test to 'failure' indicated by the red examples
  - Routine test followed by parts analysis, represented by the blue line

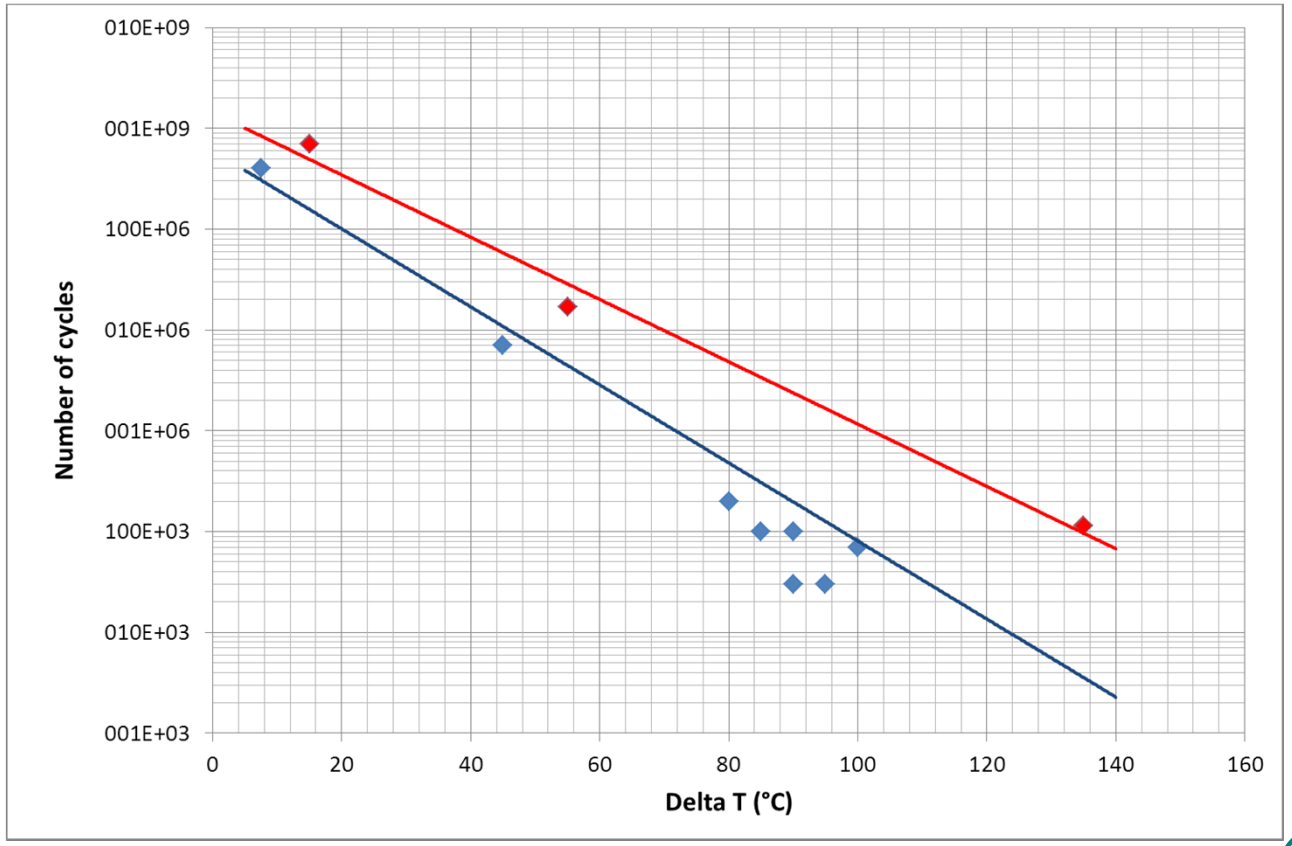

Press-pack IGBT reliability – Thermal cycling

- Thermal cycling of single die cells
  - 5.2kV die 1st Generation ABB die
- Standard power cycle test >80k, ΔTj of >80°C
  - Cycle 50Hz half-sine 330A (per 4 die)
  - Cycle time 60 Sec on, 30 sec off

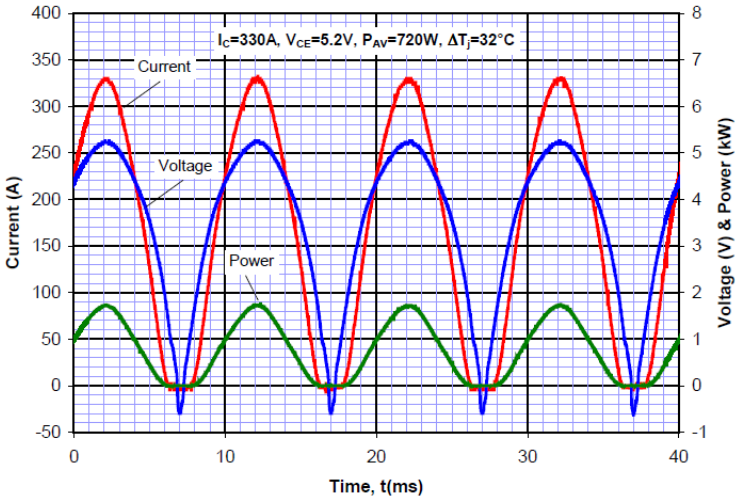

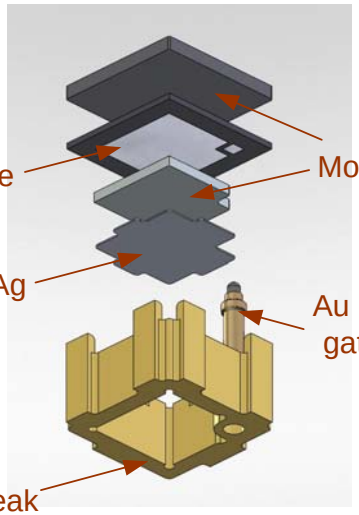

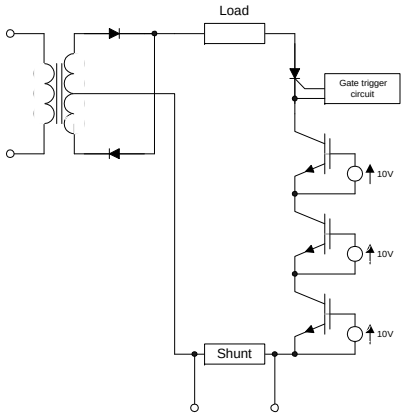

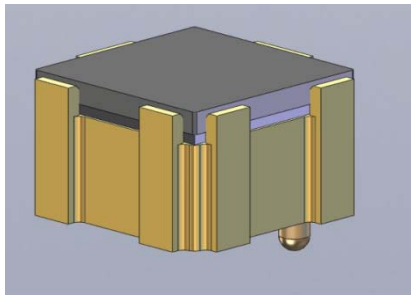

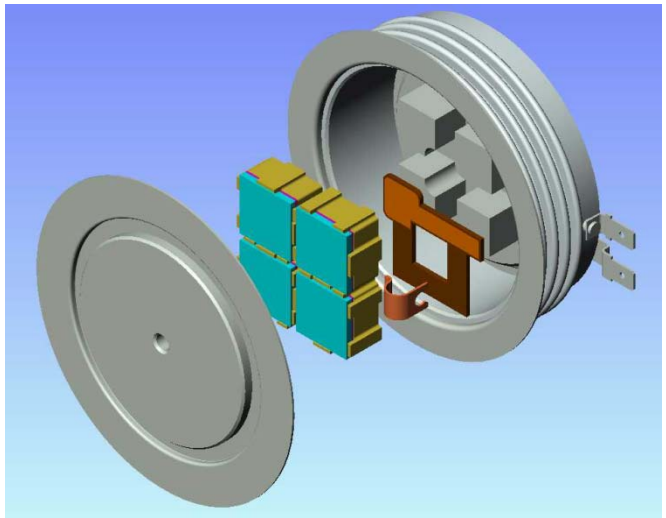

Press-pack IGBT reliability – Thermal cycling

- Post thermal cycling emitter side contact

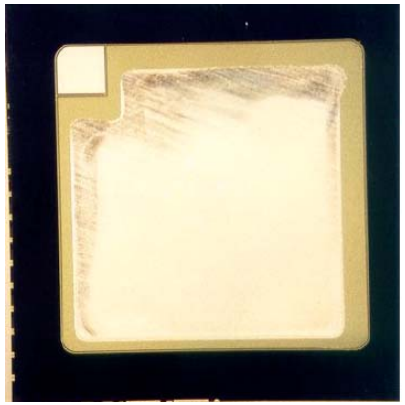

Die emitter

Mo (die side)

Mo (Ag side)

Ag (Mo side)

Ag (Cu side)

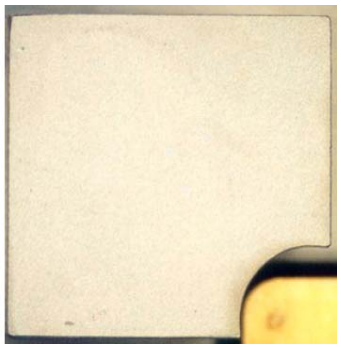

Cu pillar

Press-pack IGBT reliability – Thermal cycling

- Thermal cycling of 3rd generation 4.5kV & 1st generation 6.5kV die
  - Device T2400GA45E, all IGBT x44 die
    - 30k cycles plus
    - 60 Sec on 60 Sec off, 1760A, ΔT 90°C
  - T0258HF65G, 6x IGBT & x3 Diode die
    - 30k Cycles plus,
    - 60 Sec on 60 Sec off, 468A, ΔT 95°C

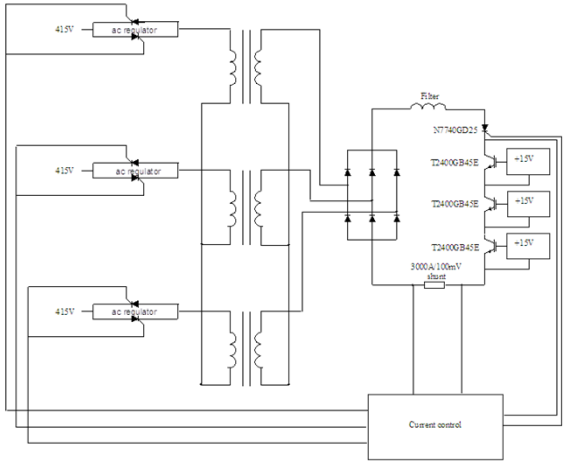

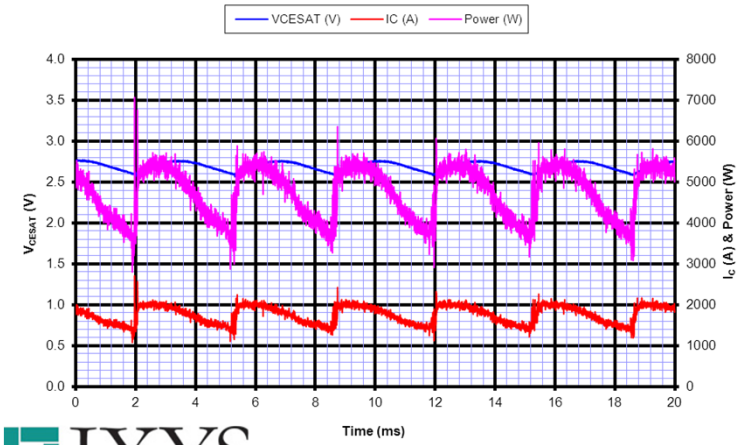

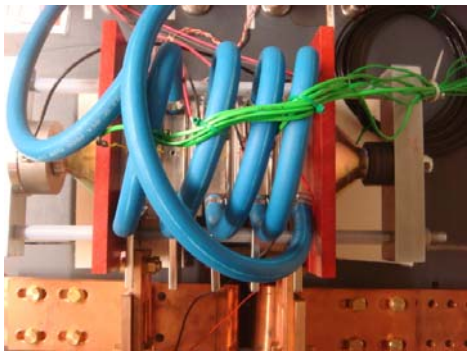

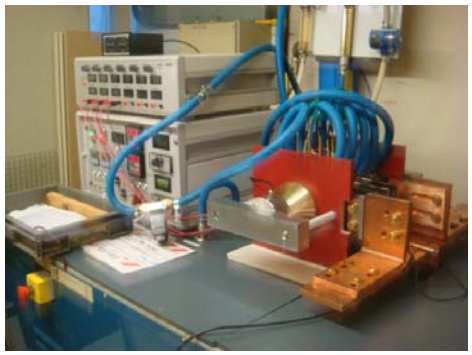

Press-pack IGBT reliability – Thermal cycling

- Post thermal cycling internal views


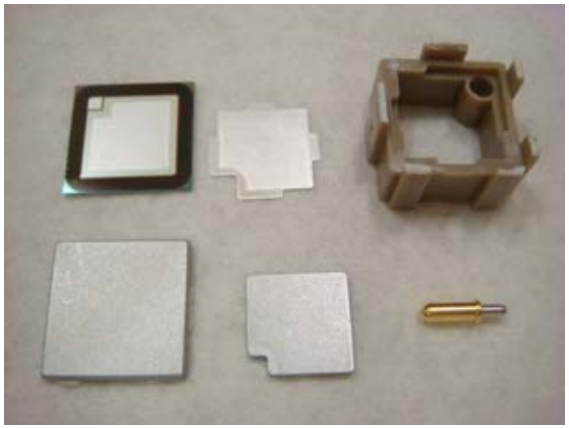
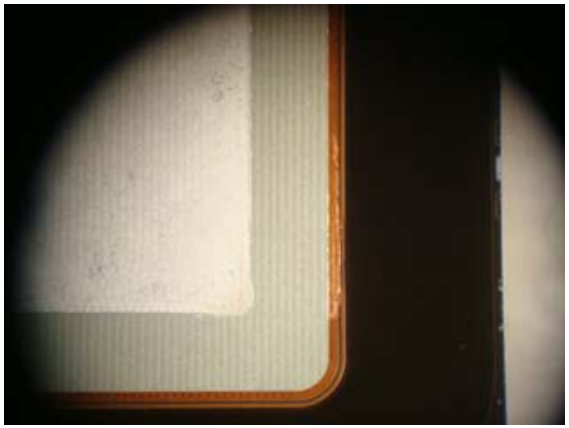


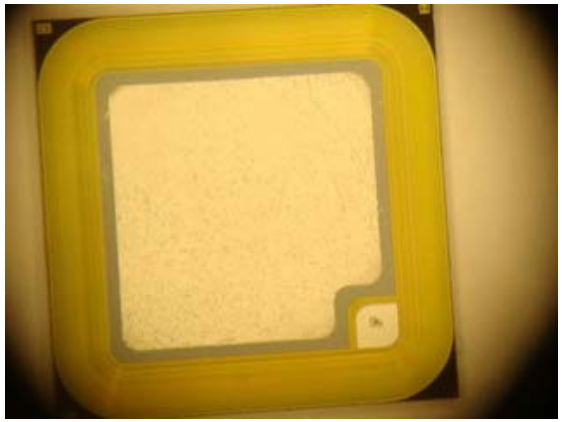

Press-pack IGBT reliability – Thermal cycling

- Post thermal cycling internal views of example cell interfaces (ex. 4.5kV 2400A device)

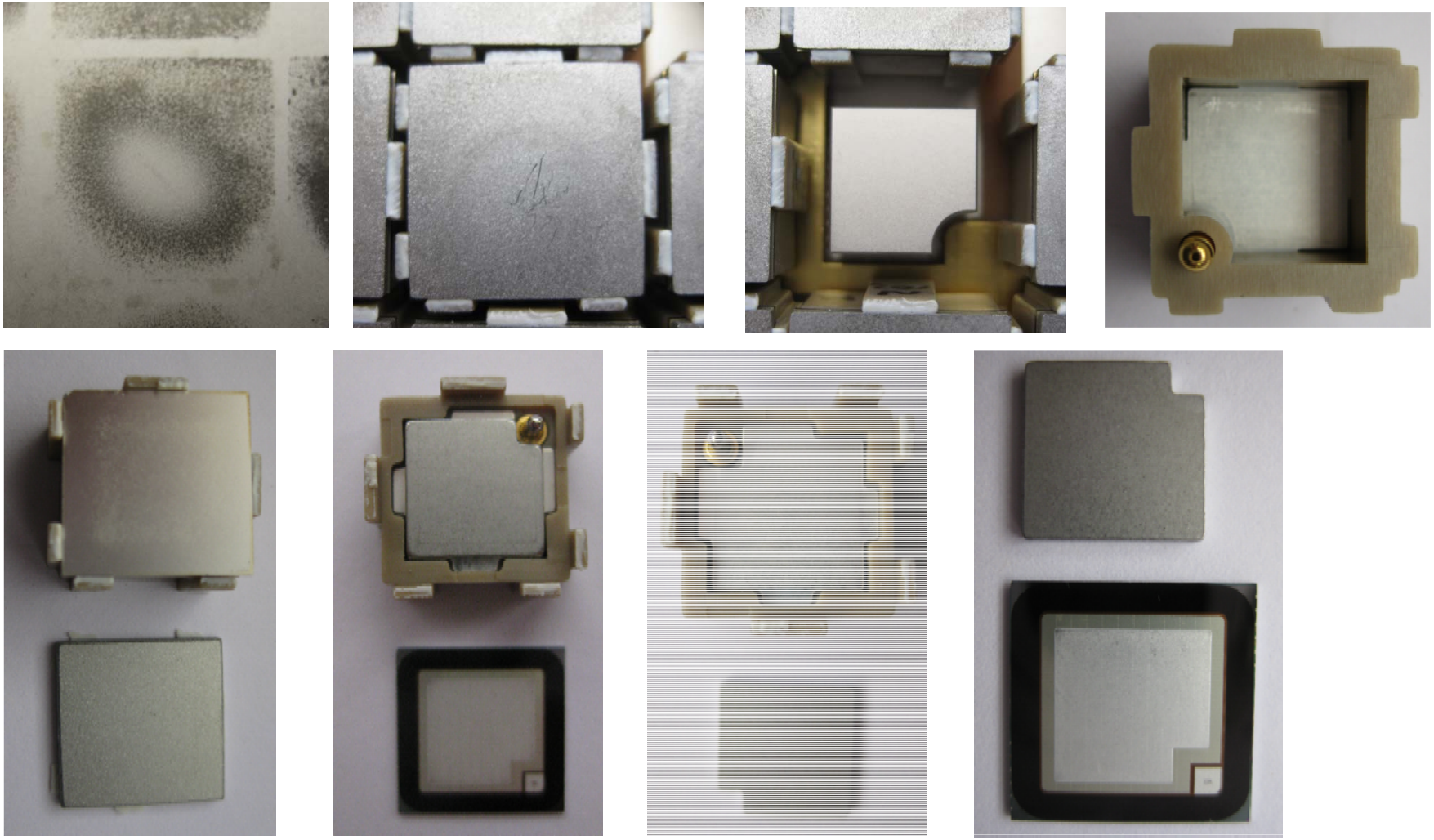

Press-pack IGBT reliability – Thermal cycling

- Post thermal cycling die close up shows minimal evidence of aluminium abrasion
  - ex. 4.5kV 2400A device

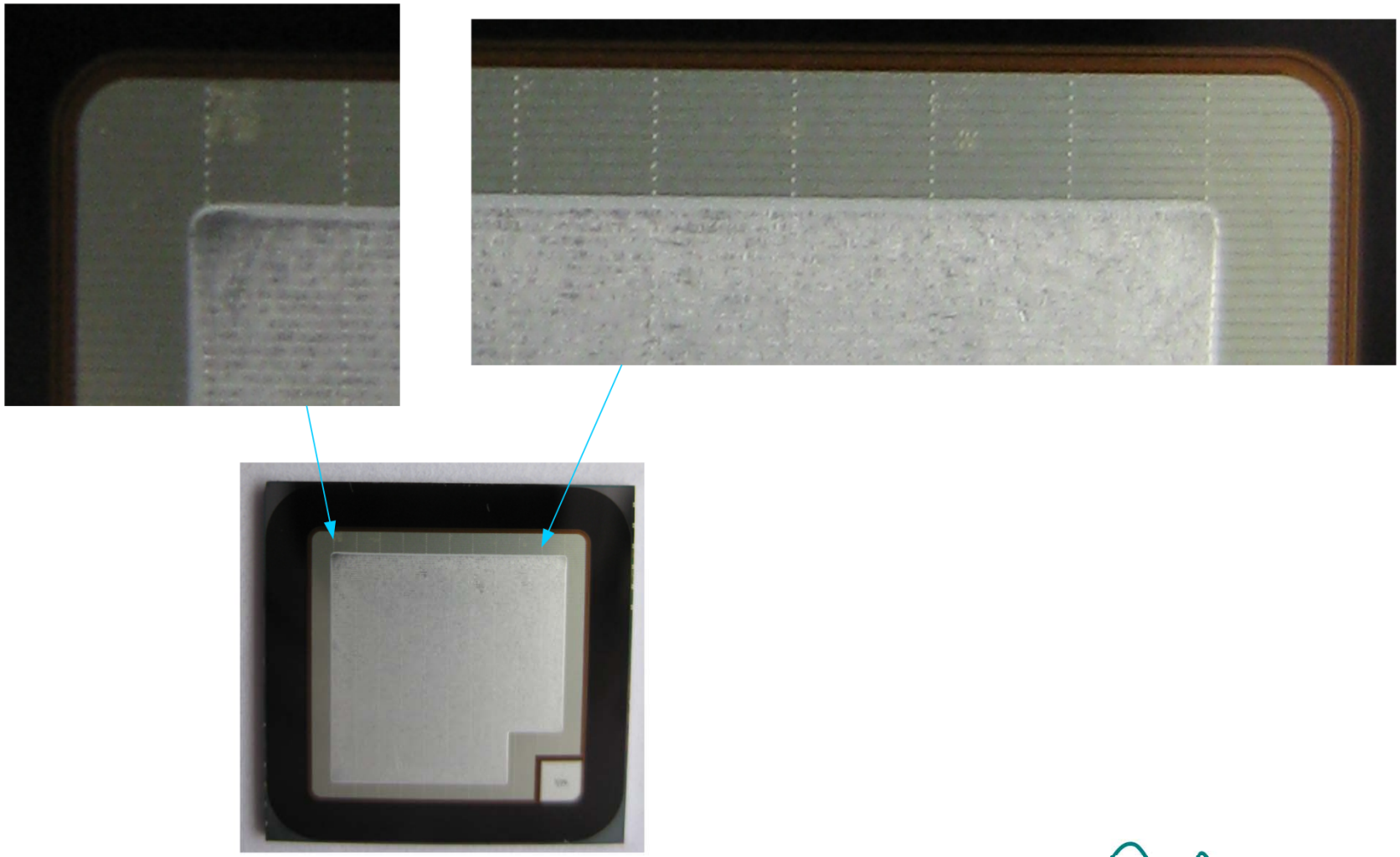

Press-pack IGBT reliability – Short circuit & rupture

- Single diode failure (6.5kV 1390A PP IGBT)
  - Consequential discharge of 1400µF capacitor charged to 3880V
    - Discharge energy 10.54kJ
  - Failure is to a stable short circuit with no package rupture
    - Failed die forms an amalgam with moly
      - Which has been prised open for the photographs
    - Typically the device remains with volt drop similar to Vce(sat)

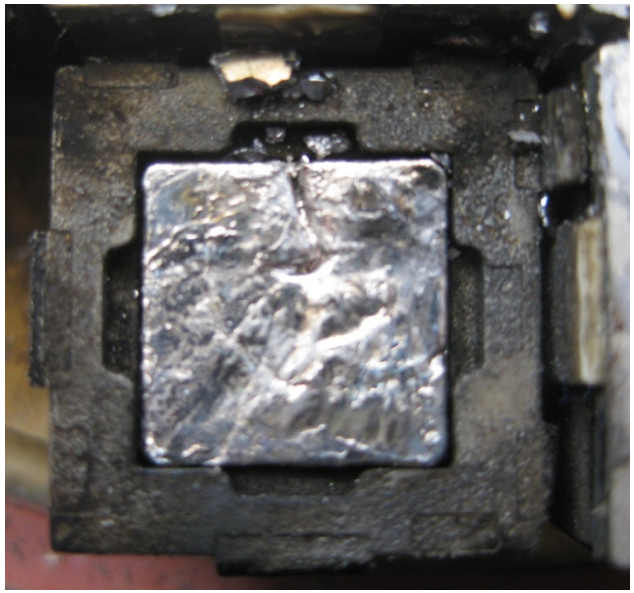

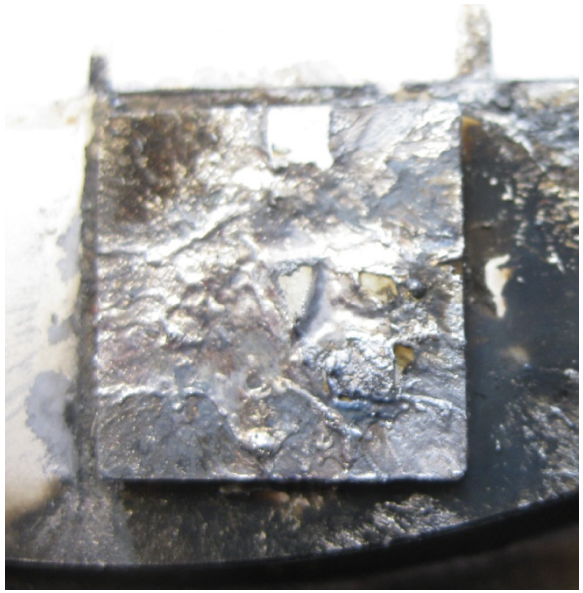

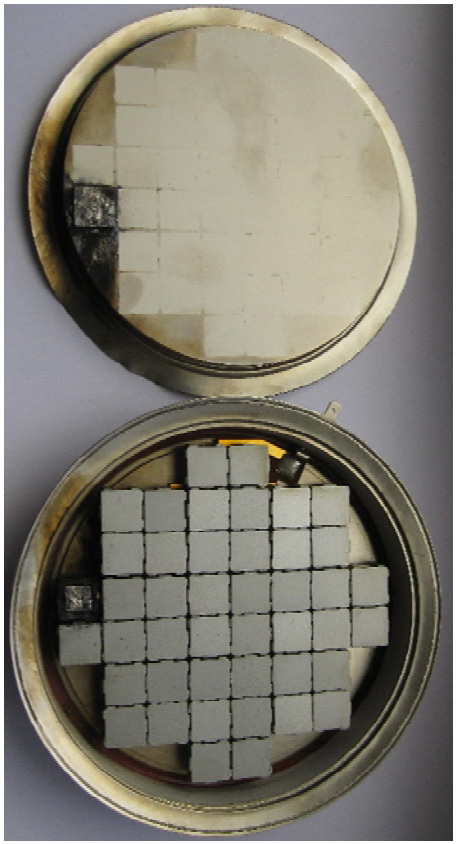

Press-pack IGBT reliability – Short circuit & rupture

- 1200A, 3.3kV module
  - Consequential discharge of 1500µF capacitor charged to 1250V
    - Discharge energy 1.17kJ
    - Less than 10% of the energy of the PP device
  - Failure sequence for module
    - Device failure initially to short circuit
    - Fusing of connections results in open circuit
    - Dielectric discharge through gel
    - High pressure gas release results in rupture
    - After brief secondary s/c final state is indeterminate

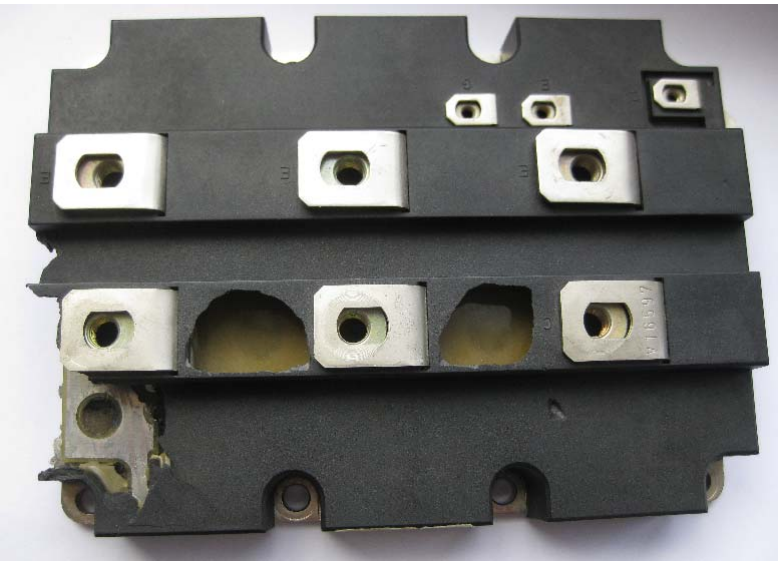

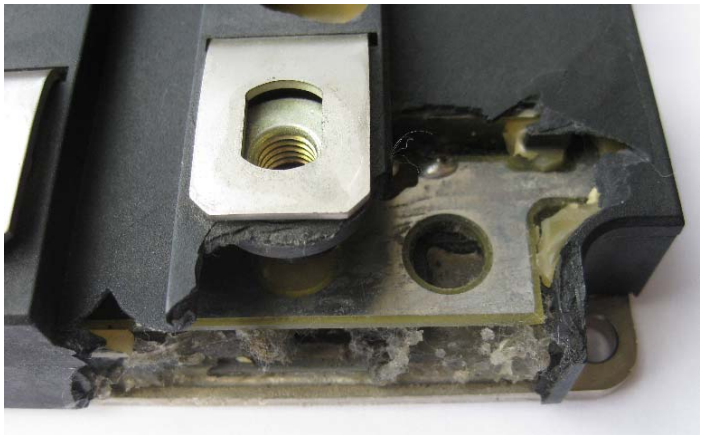

Press-pack IGBT reliability – Short circuit & rupture

- If you put in enough energy the package will rupture
  - Conditions and consequence is similar to a conventional thyristor
  - Plasma ejection is a possibility
  - Illustrated examples:
    - 1390A, 6.5kV Press-pack IGBT
    - 2360A, 6.5kV Medium voltage thyristor
  - Though ruptured, both devices remain as a stable short circuit

Press-pack IGBT reliability – Short circuit test

- Two IGBT die pre- failed by capacitive discharge
- Subject to repetitive pulses of >10kA
  - First & last pulse to right
- Device remains Short circuit under test

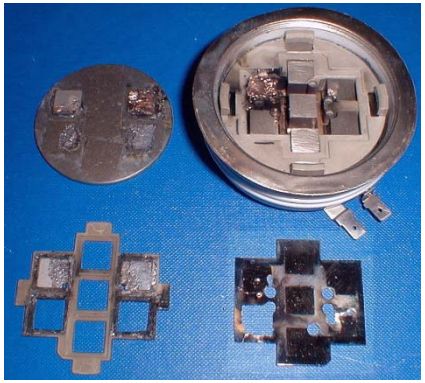

Example 1

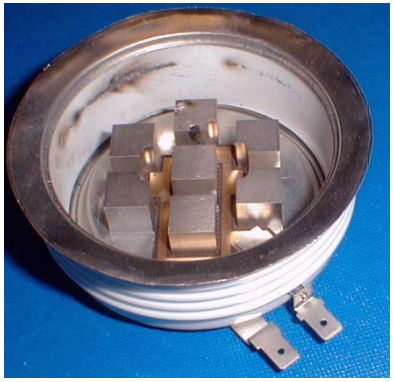

Example 2

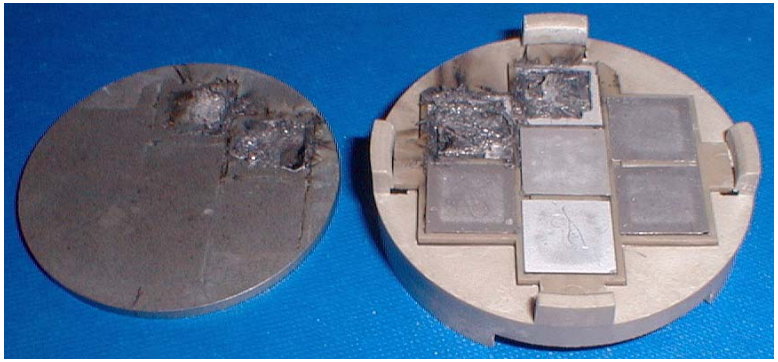

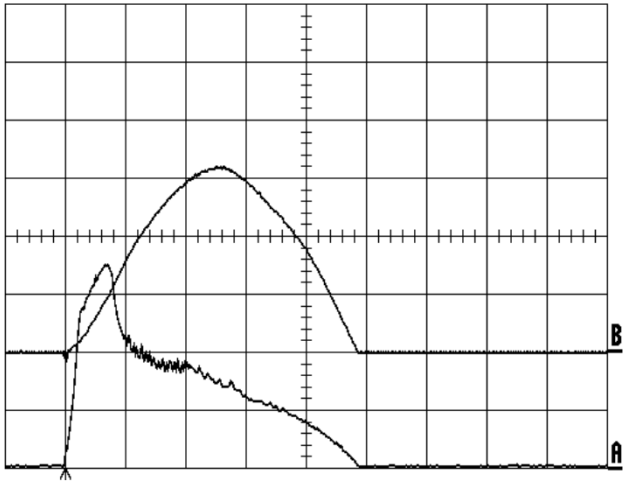

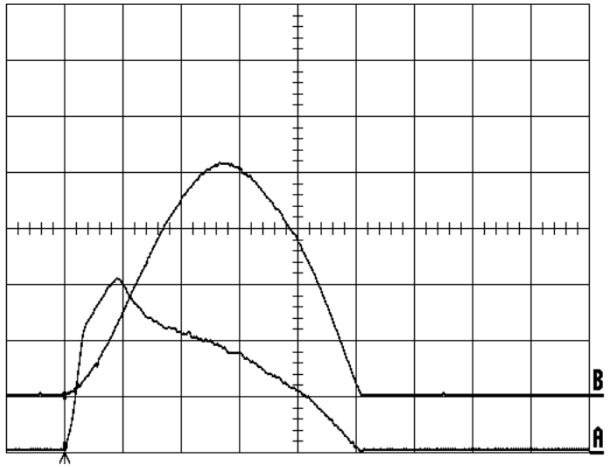

Example application: Medium voltage drive

- Medium voltage drives for steel mills, pumps etc.
  - Several applications 900A to 2400A 4.5kV devices
  - Example CKD Elektrotechnika
    - 7 level converter
    - 8.5kV, 700A , 800Hz using T2400GB45E

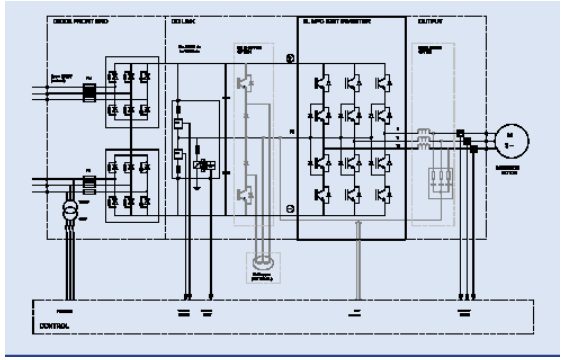

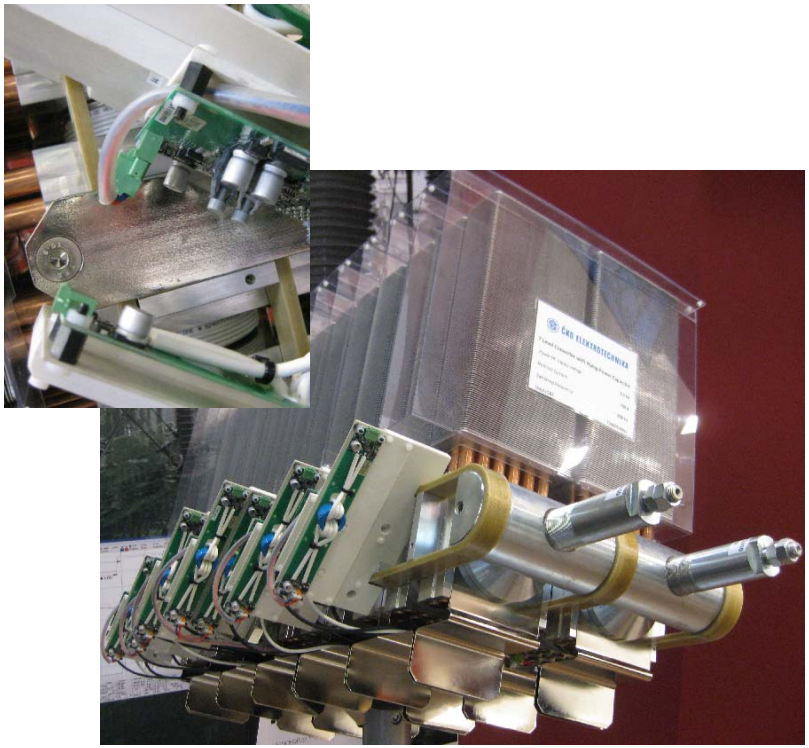

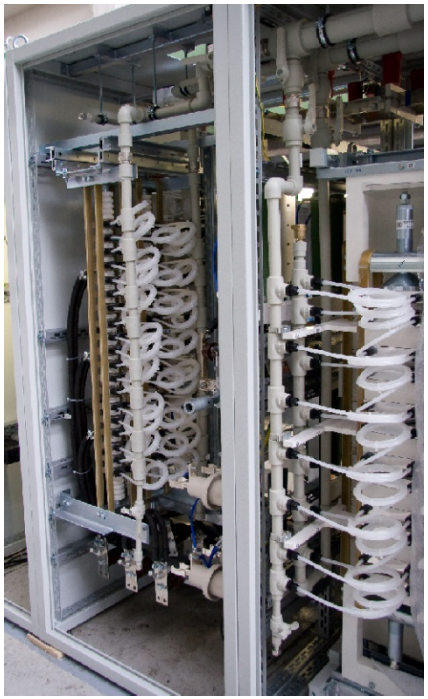

Press-pack IGBT - Marine drives

- Medium voltage drive for marine application
  - 3-level inverters single phase assemblies
  - 3.3kV (1.6kA)
    - Include snubbers and gate trigger circuits

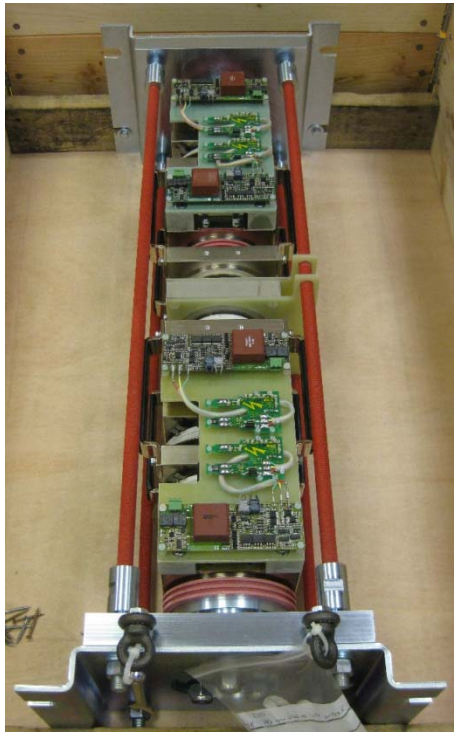

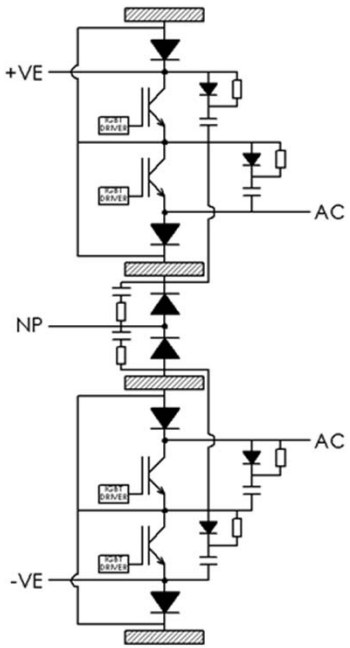

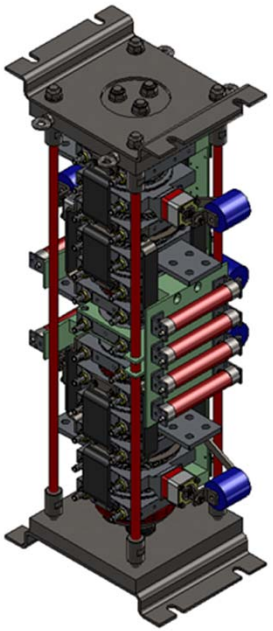

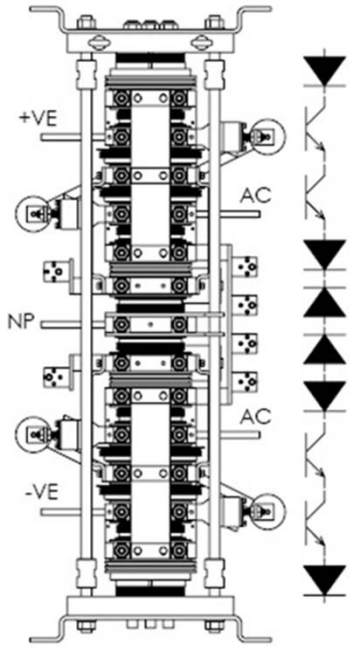

Power Rating (MW)	8
Nominal Line Current (Amps)	1600
No. of IGBT's	4
No. of Diodes	6
No. of Coolers	13
Required IGBT Type	T2400GB45E
Required Diode Type	E2400TC45C

3.3kV stack XA1600GV45WT

IXYS

Application: Wind generation

- Three level phase leg assembly
  - 6MW converter for connection to power grid
  - T1800GB45A & E2400TC45C

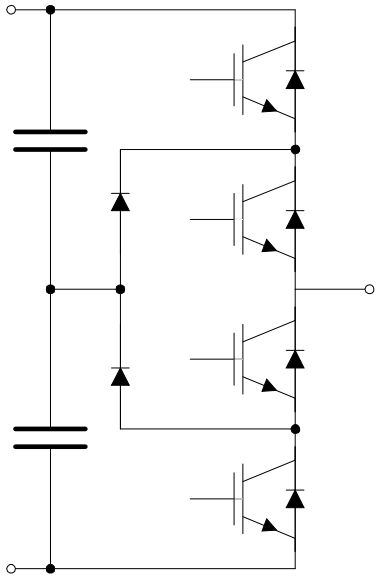

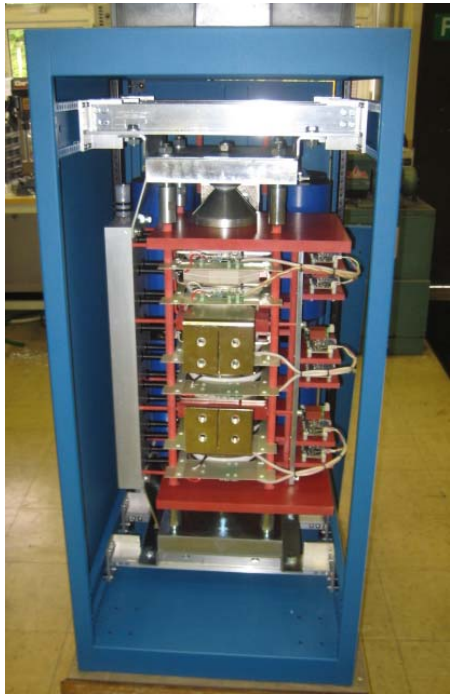

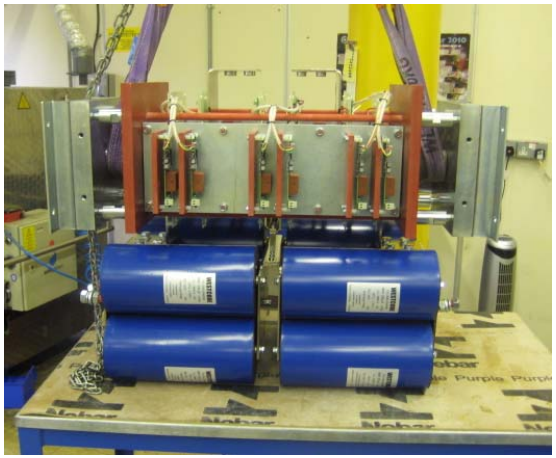

Application: Frequency converter

- 5MW Ship to shore frequency converter
- Phase leg assemblies
  - T0900EA45A

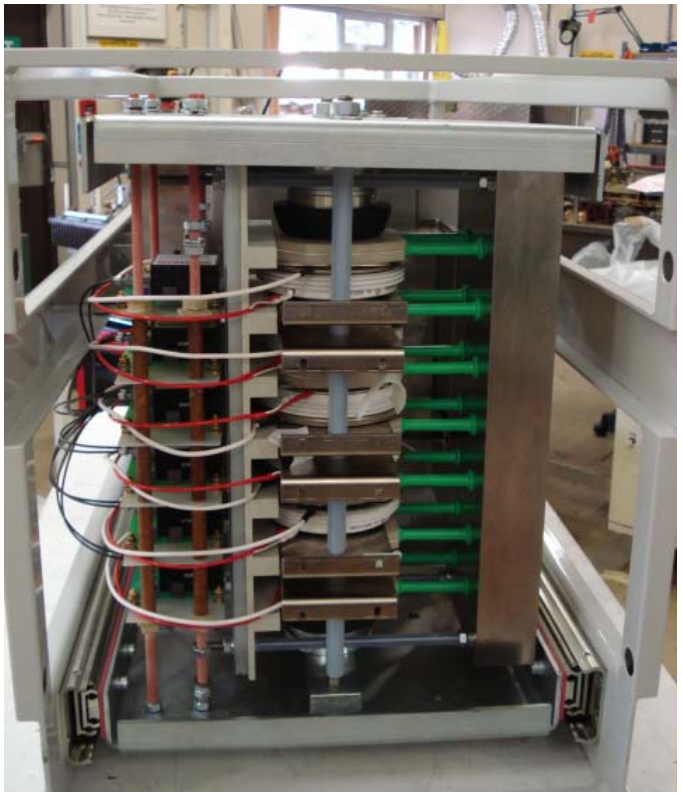

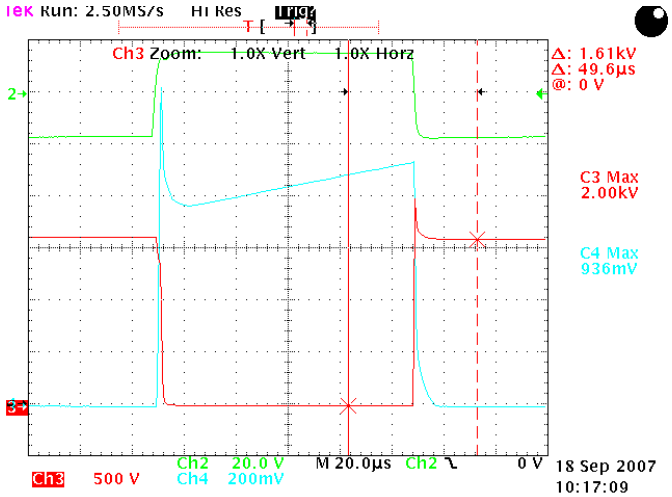

Example application: Electric vehicles

- Electric vehicles – several active projects & past projects
  - Electric drive mining trucks
    - Customer for now obsolete WTC140AAC18
    - Project revived with T1200TA25A & F1500NC250
  - Agricultural tractors & commercial vehicles
    - Devices in immersion oil cooled system
    - 1.7kV/2.5kV press-pack IGBTs, 47mm pole face housing – 600A rating

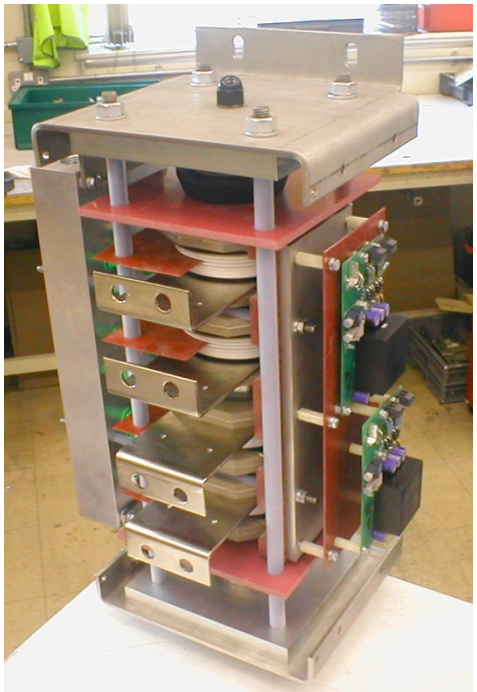

Example application: High speed train

- KTXII High speed train (South Korea) - main traction drive
  - New build design - 8MW four quadrant asynchronous traction drive
    - Switching frequency 540Hz, Fundamental frequency 0-60Hz
  - Device operating conditions
    - DC voltage 2.8kV, Peak current 1.8kA
      - T2400EA45E 125mm boss asymmetric blocking press-pack IGBT
      - E2400TC450 75mm boss HP Sonic FRD

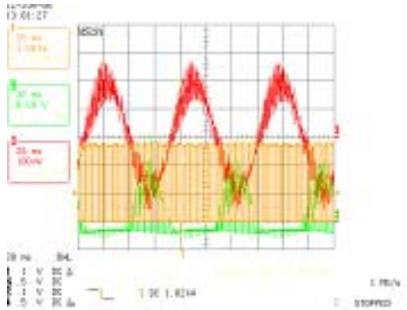

Application: Traction refurbishment

- Examples:
  - RSA rail Class 8E chopper refurbishment
    - 600A Chopper circuit, operating at 3kV DC
    - Replacement of reverse conducting thyristors
    - Oil immersed cooling system
  - Polish 1.2MW Shunting locos
    - Re-engineering of fast thyristor chopper
  - Street tram conversion
    - Inverter & chopper phase leg assemblies
    - Replacement of GTO thyristors with PP-IGBTs
    - 2.5kV asymmetric blocking PP IGBT

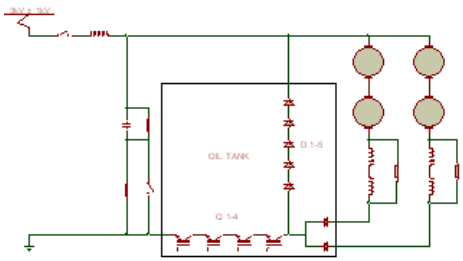

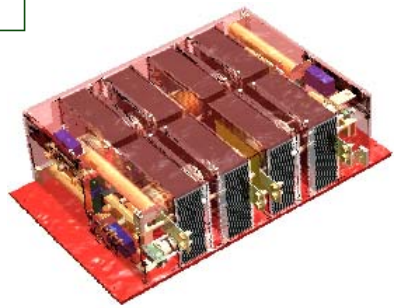

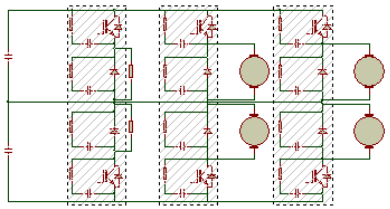

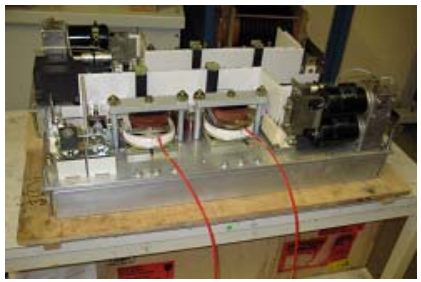

IXYS

Example application: Pulsed-power

- Five terminal Pulsed power switch
  - 13 press-pack IGBTs in series
  - Ancillary circuits
    - Gate trigger circuits.
    - Snubbers & voltage sharing

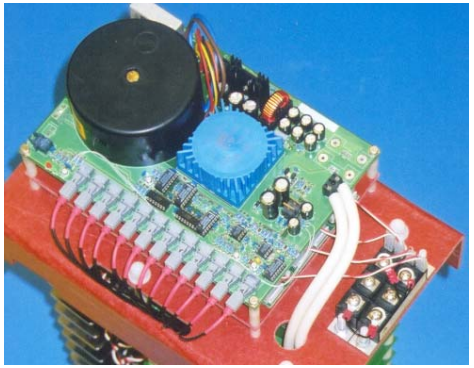

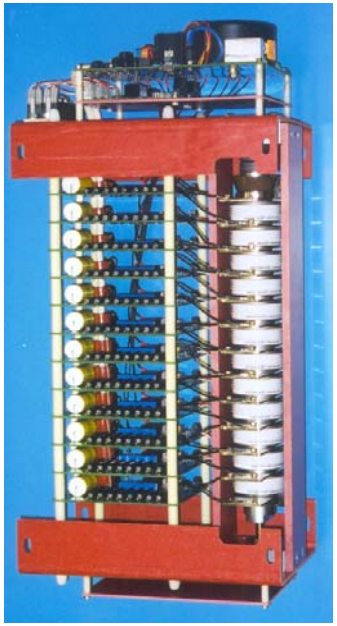

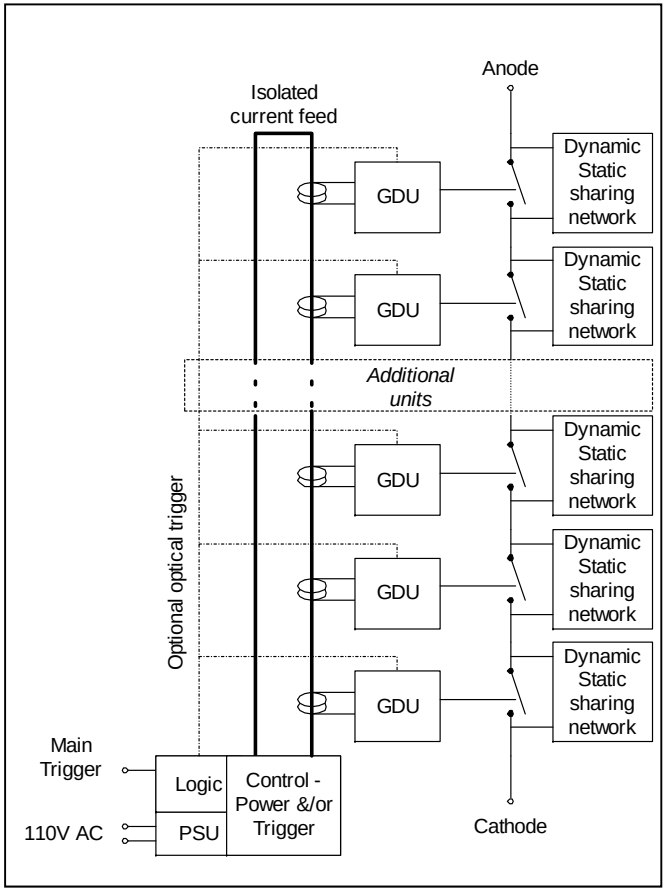

Example application: Induction power supplies

- Induction Heating power supplies
  - Metal processing
    - 400kW, T0500NA25E
  - Induction melting
    - Various applications 300Hz to 1.5kHz

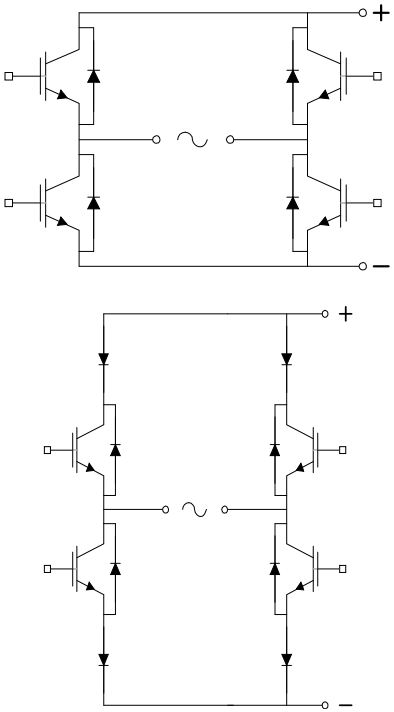

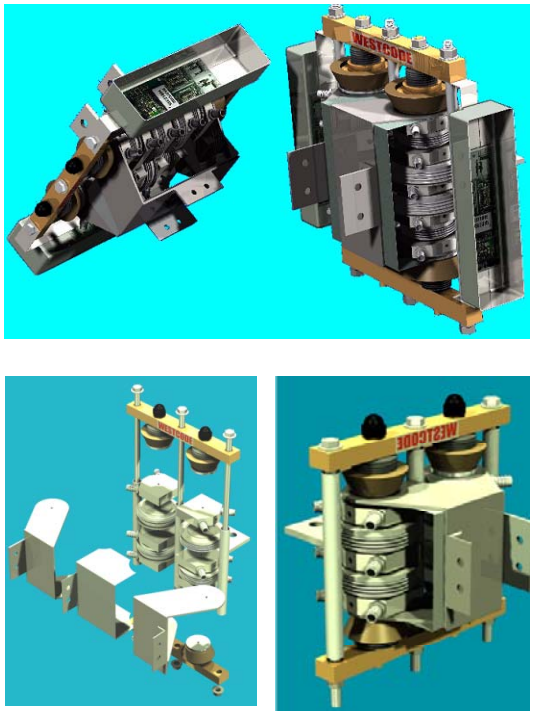

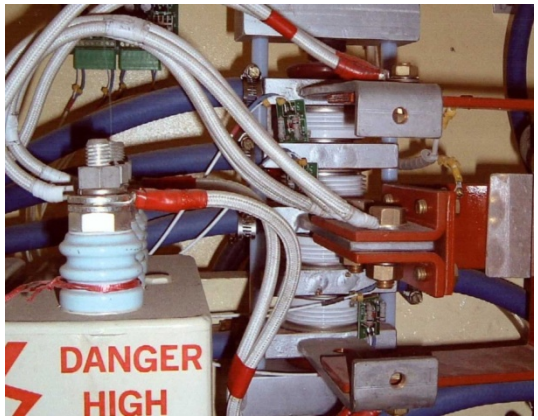

Press-pack IGBT: Introduction of 6.5kV

- 6.5kV products
  - New larger die size
  - 30mm thick package for higher voltage rating
  - First introductions in 66mm & 110mm electrode diameter packages
    - 110mm device rated at 900A with integrated diode, 1375A all IGBT
  - Future product with 132mm electrode in development
    - All IGBT device with current rating of 1890A
  - Offers reduction in number of series devices for medium voltage applications

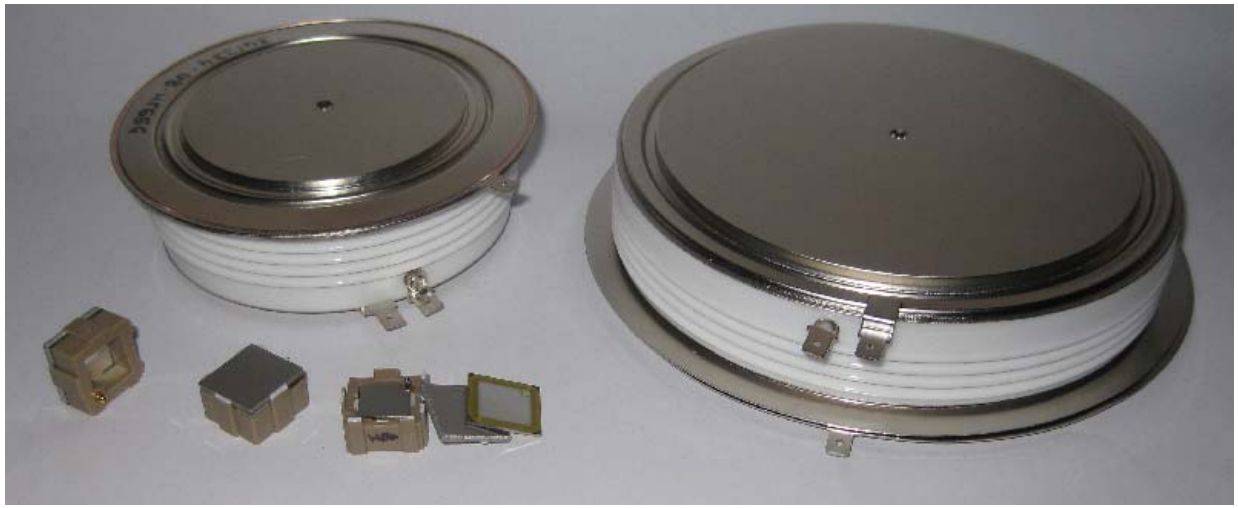

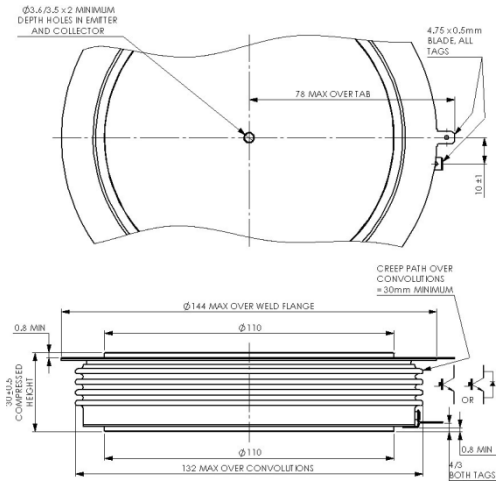

Press-pack IGBT: towards the next generation

- The current range of press-pack IGBT is a mature product
- Higher power ratings for 6.5kV are possible with present design
  - But limited to parts with similar dimensions
- Extension of the power ratings is now limited by packaging technology
  - SOAR does not scale beyond the current ratings
    - For devices up to 85mm SOAR is twice nominal current rating
    - For larger devices this reduces by 20% for a 125mm pole device
  - Both thermal and electrical limits have been reached
- How to improve the package design and extend ratings?
  - Two principle aspects are in consideration:
    - The cooling of the individual die
    - The harmonisation of switching multiple die in parallel
  - A next generation of packaging should realise devices to 150mm electrode diameter
    - Potential current ratings of >4KA with >8kA SOAR (4.5kV die)
- Third generation package
    - Ag bonded die
    - Dual pin (emitter return)

Press-pack IGBT – Next generation packaging

- Third generation package – emitter return pin
  - Current design uses the emitter electrode as the gate return
  - Gates are connected via sprung pins to a symmetrical distribution board
  - The larger the device the greater the imbalance between the paths
    - Parasitic components in the gate are very uniform
    - Not so in the emitter
    - Only the gate is damped against inter chip oscillation by resistor embedded in the die

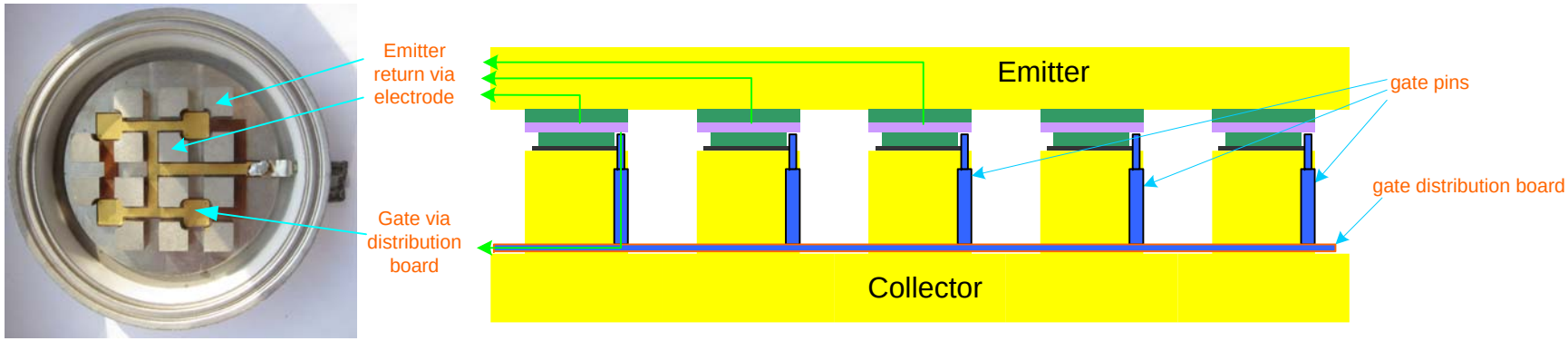

Press-pack IGBT – Next generation packaging

- Third generation package – emitter return pin
  - New design will incorporate a multilevel board
  - Close coupling of the gate and emitter paths to each die
    - Improved cancelling of parasitic components
  - Separate pin contact and path for each emitter
  - Addition of emitter resistors to dampen inter chip oscillation
- Better matching of the emitter gate path
  - Enhance parallel switching of die

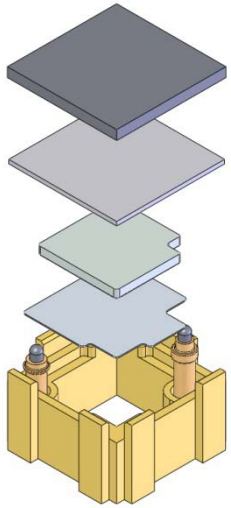

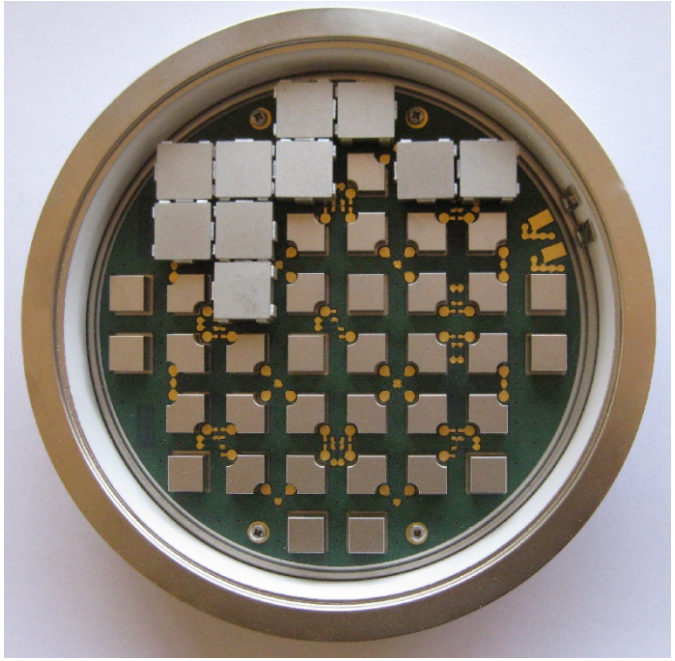

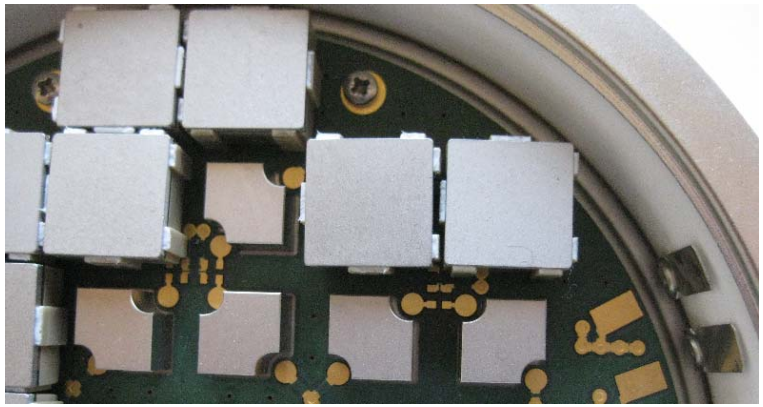

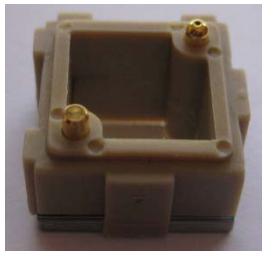

Press-pack IGBT – Next generation packaging

- Third generation package – Ag sinter
  - Construction today is based on floating die
    - Fundamental of design was to eliminate unreliable solder joints
    - Limitation is the cooling of the junction termination
    - Dry face between collector side of die & backing moly
      - Same basic construction as alloy free thyristor
      - Proven technology, but increased thermal resistance between die & moly
    - Improved cooling can be achieved by bonding the die to moly
      - Solder or hot alloy not possible
      - New technology available in Ag sinter
        - » Lower temperature does not damage die characteristics
        - » Uniformity of bond to maintain consistent cell thickness

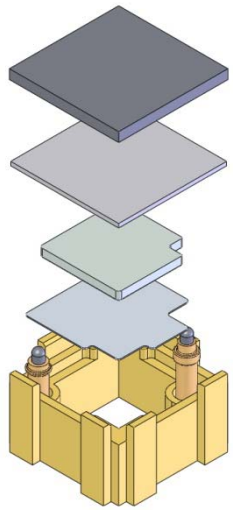

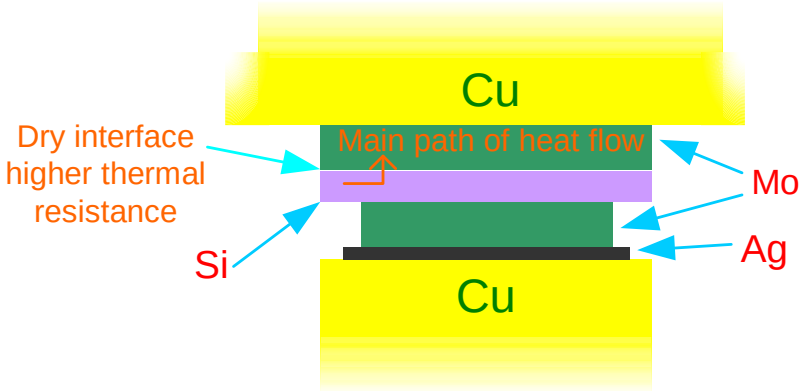

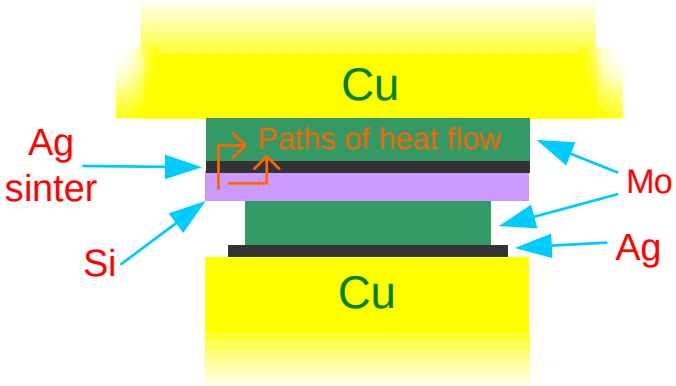

Press-pack IGBT Next generation packaging

- Third generation package
  - Based on 150mm electrode diameter package

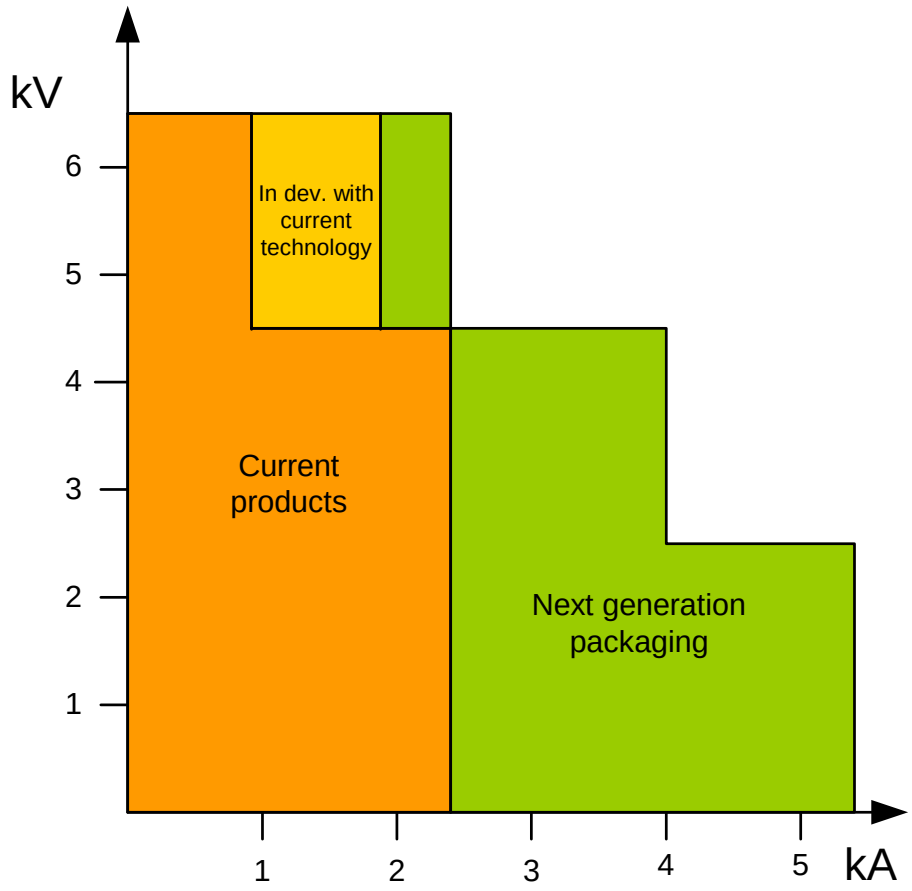

Press-pack IGBT

- Thank you for your attention
- Questions?