14 juni 2018
1931 Congrescentrum Den Bosch

POWER ELECTRONICS 2018

electromechanics power electronics

Paralleling of Gallium Nitride transistors for 48V high current automotive applications

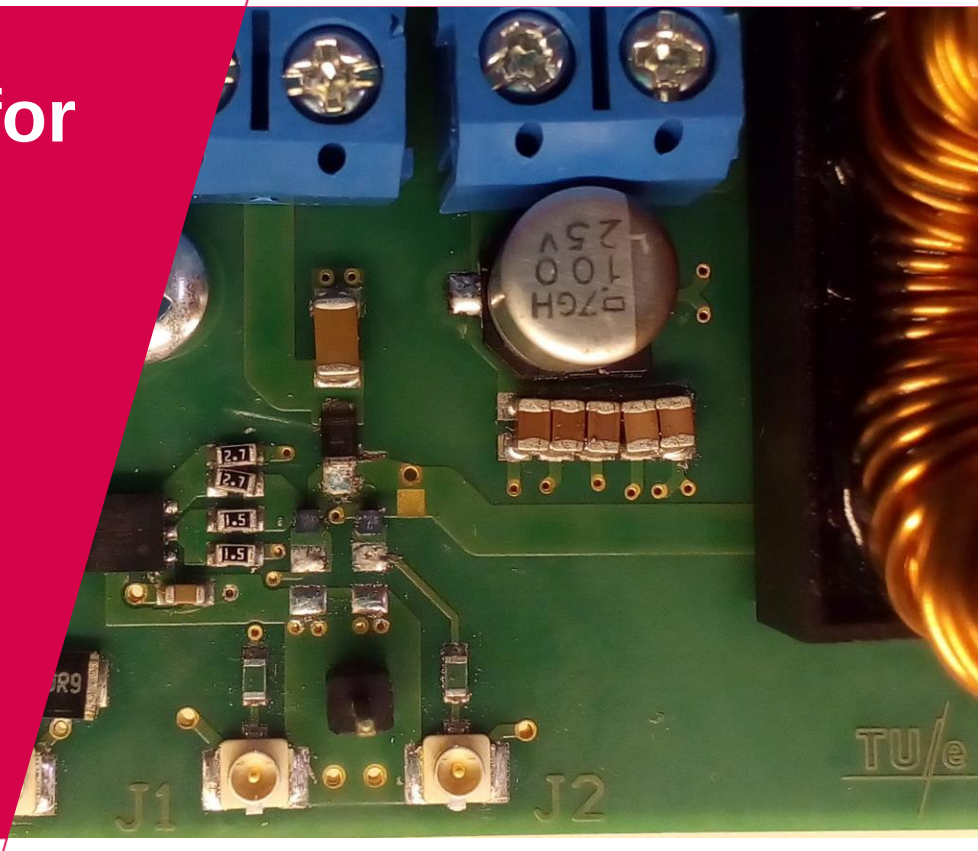

Nikola Boskovic, MSc

Prof. ir. Korneel Wijnands
Dr. ir. Maurice Roes
Prof. dr. Elena Lomonova

June 14th 2018

PRODRIVE TECHNOLOGIES

punch powertrain
Gear up for the future

TU/e Technische Universiteit Eindhoven University of Technology

Where innovation starts

Outline

- Introduction
- Motivation
- Approach
- Measurement results
- Conclusion

Application – Mild hybrid system

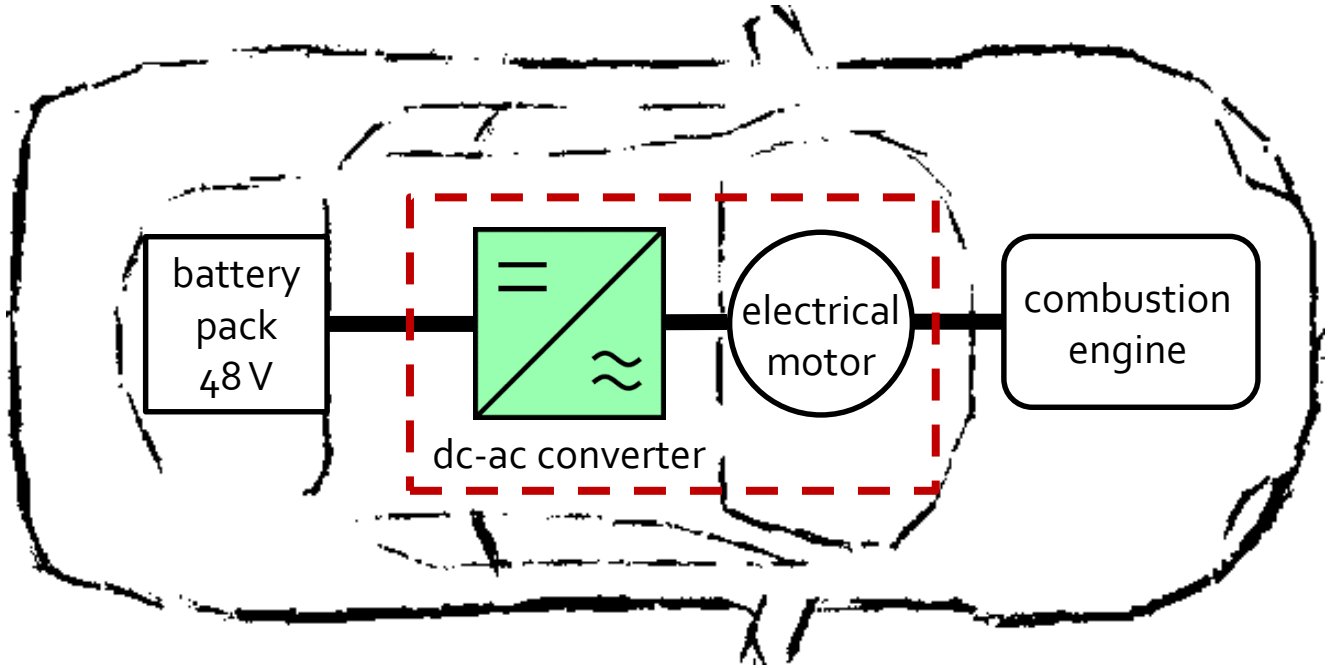

- Specifications
  - 48 V
  - 500 A_{peak}
- Key performances
  - Cost [€/kW]
  - Efficiency [%]

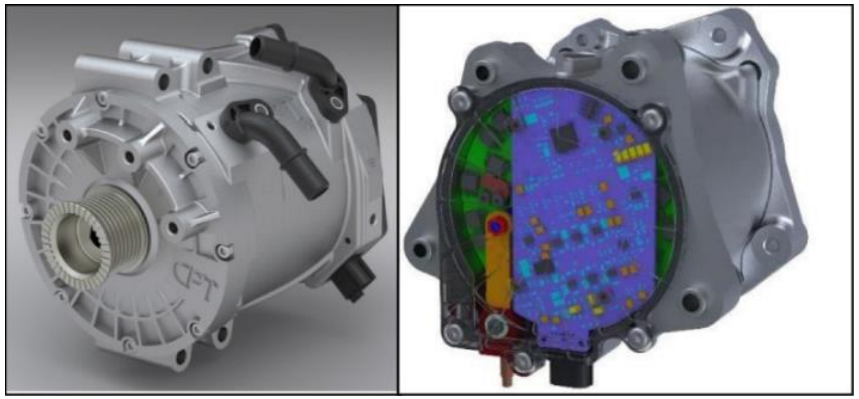

Source: Federalmogul.com

Power converter topology

- Standard 3-phase 2-level inverter
- **No transistors available** for high currents (**500 A**) – solution: **PARALLELING**
- Type of low voltage transistors? Si MOSFET or GaN.

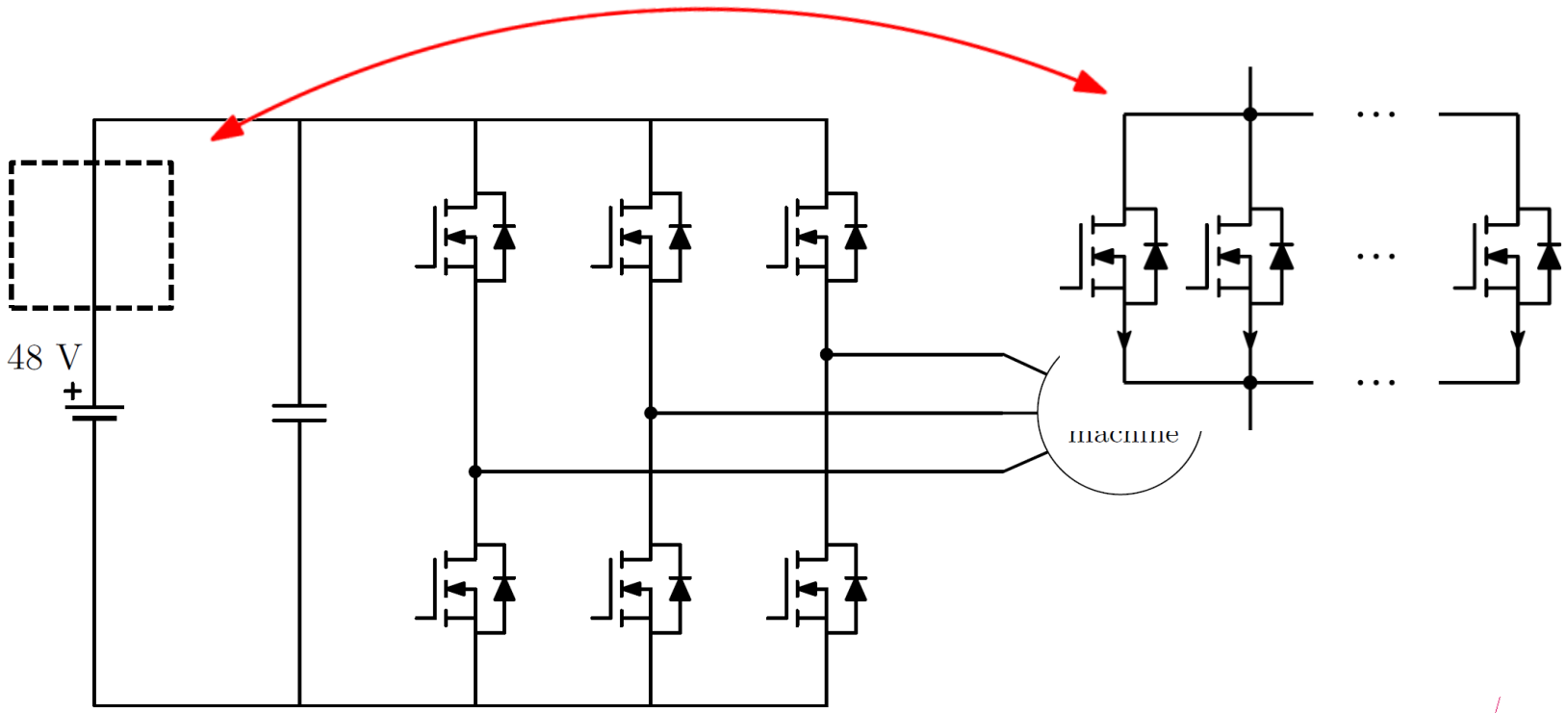

Gallium Nitride transistors

- Lower losses compared to silicon devices
- Extremely fast switching
- Paralleling GaN transistors?

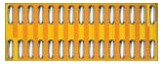

GaN transistor
(100V, 90A)
6,05 mm x 2,3 mm

Source: EPC white paper

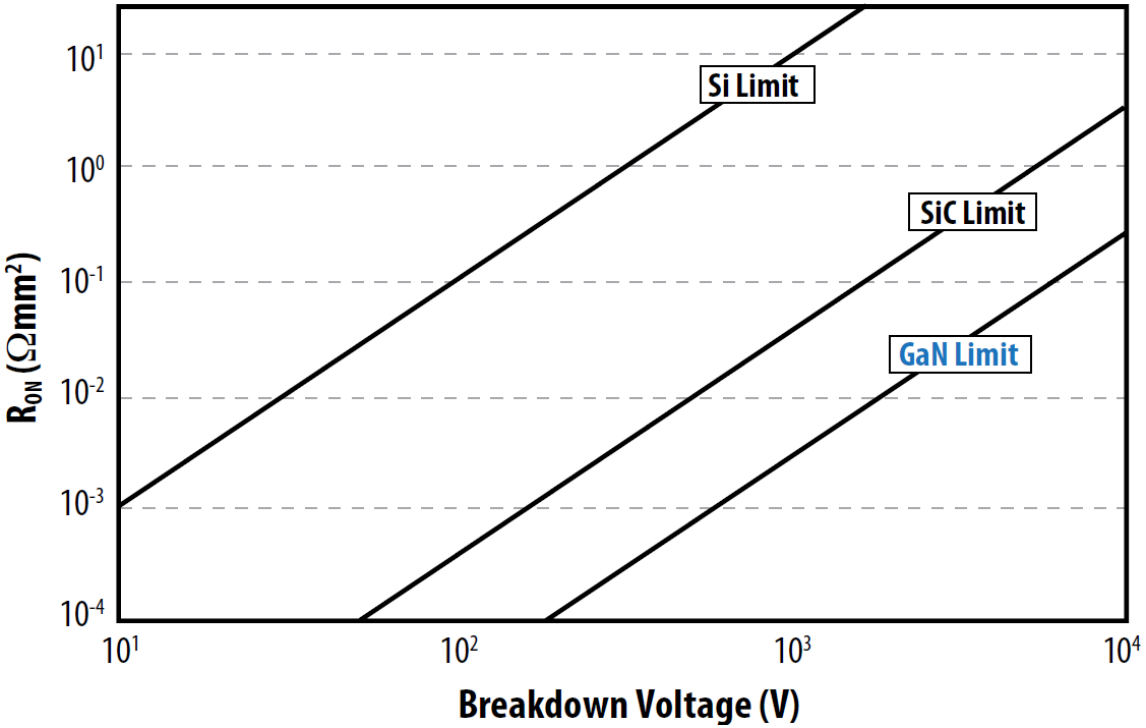

10 V/div

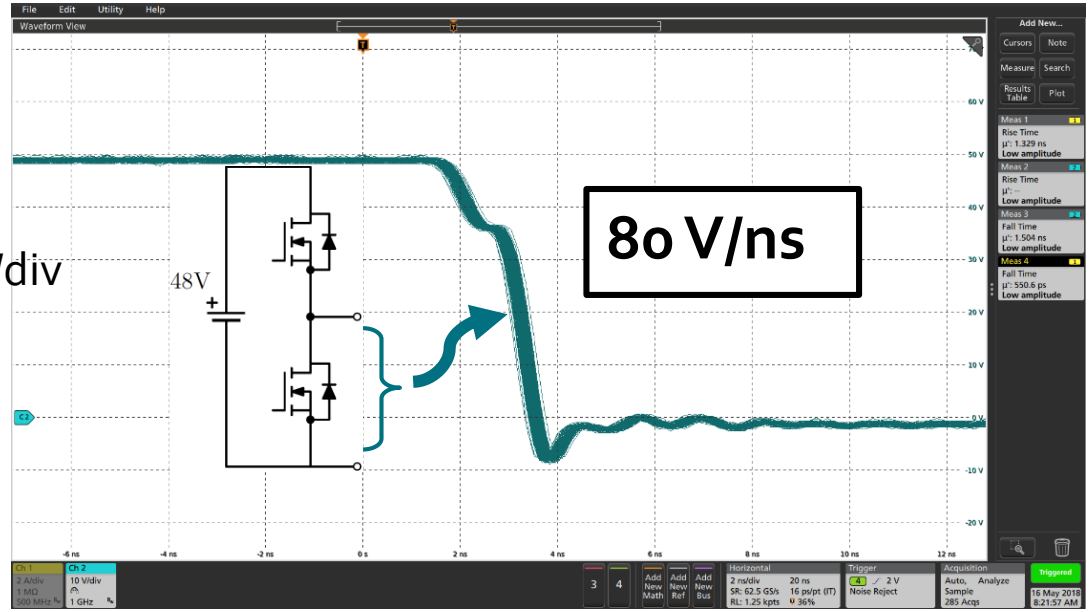

2 ns/div

Current sharing

- Static current sharing (DC)
- Dynamic current sharing (Transient)

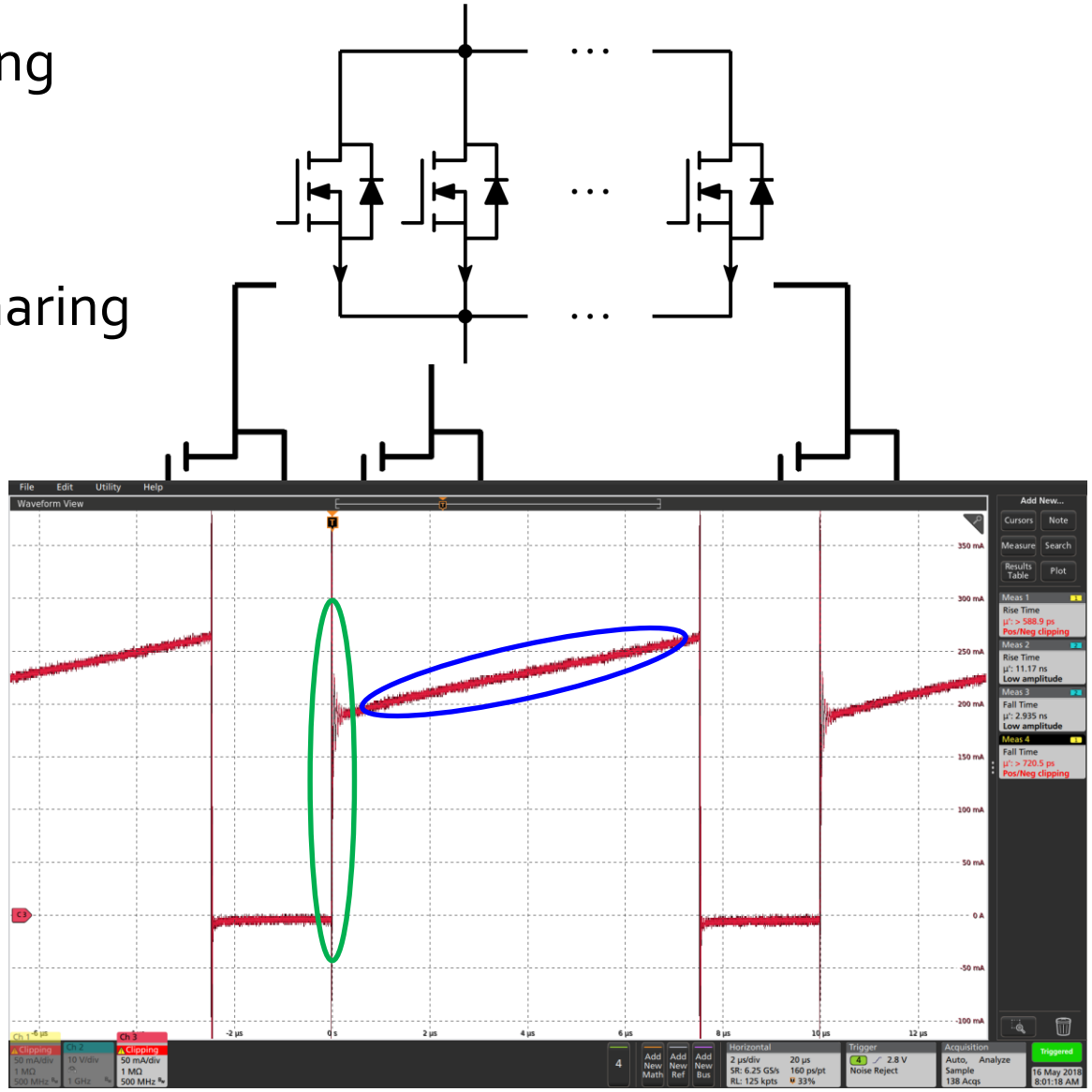

Static current sharing

- Steady state
- Resistance $R_{DS(ON)}$

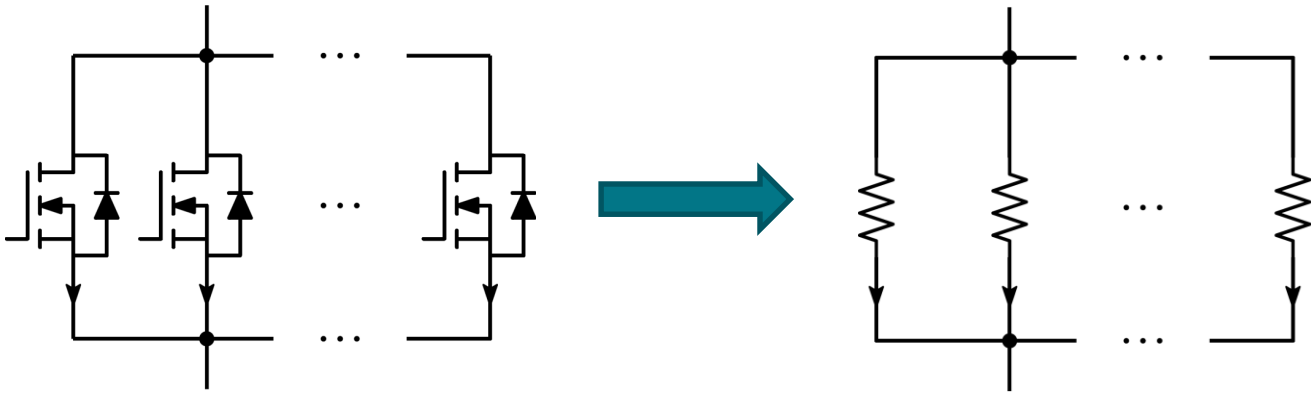

- Negative feedback
- Self-balancing

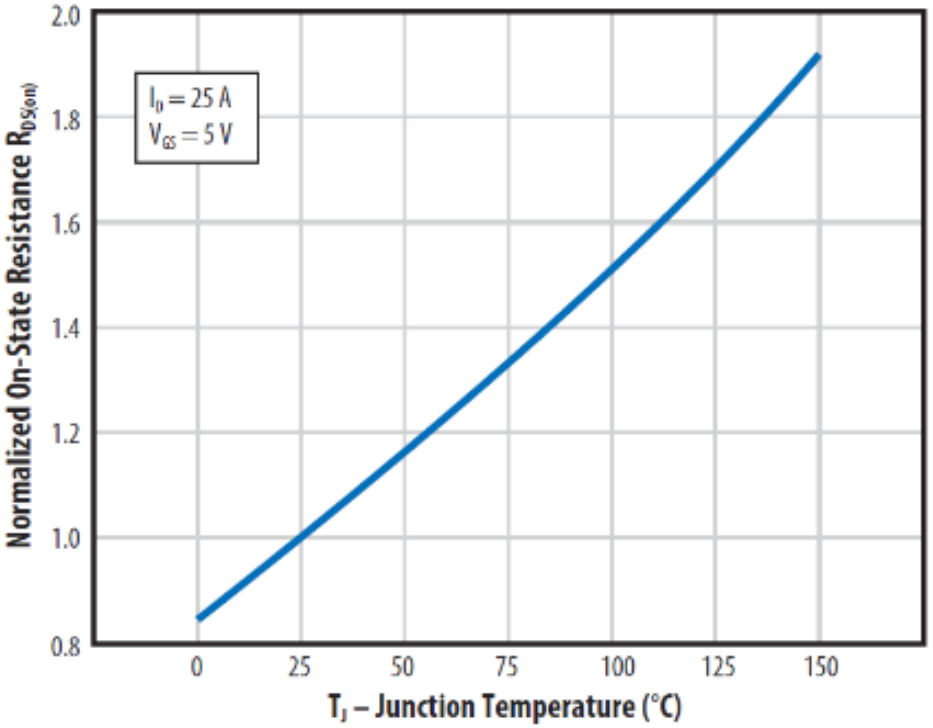

Dynamic current sharing

- Transients
- Transistor parameters
- Threshold voltage $V_{GS(th)}$

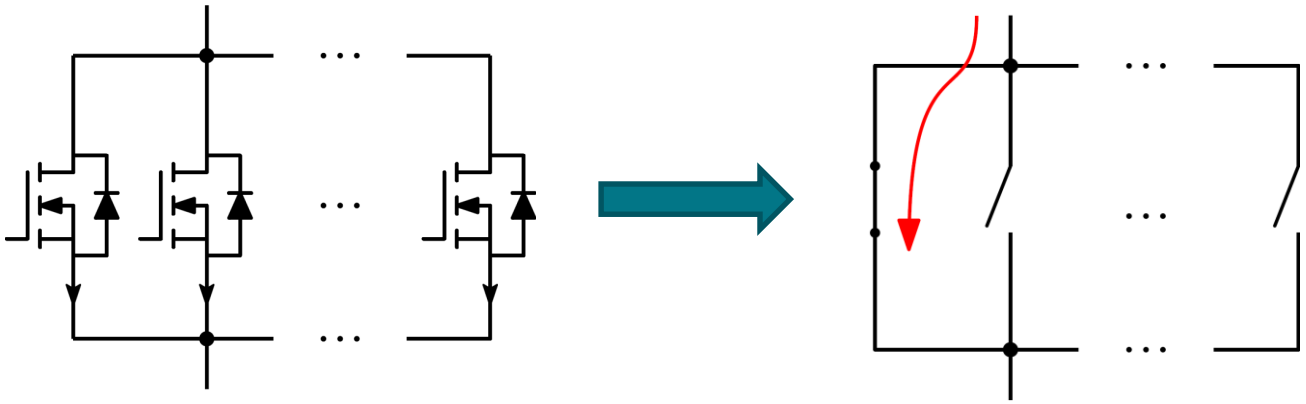

- Positive feedback
- Avalanche effect

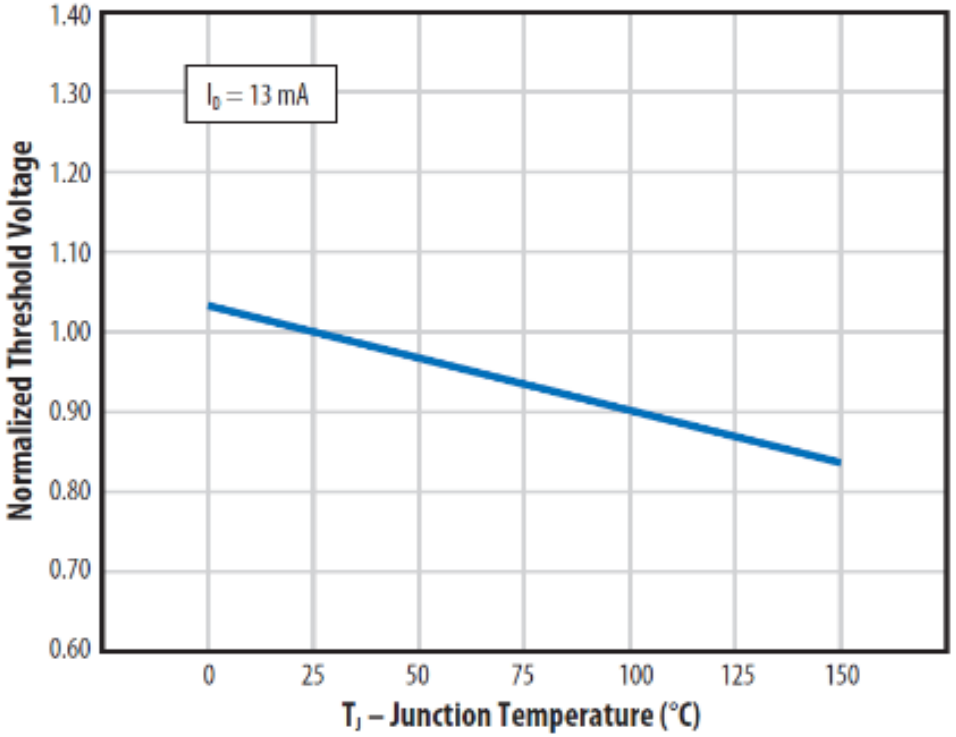

Dynamic current sharing

- Asymmetric layout – unavoidable when paralleling more then two transistors
  - Circuit parameters – mainly parasitic inductances

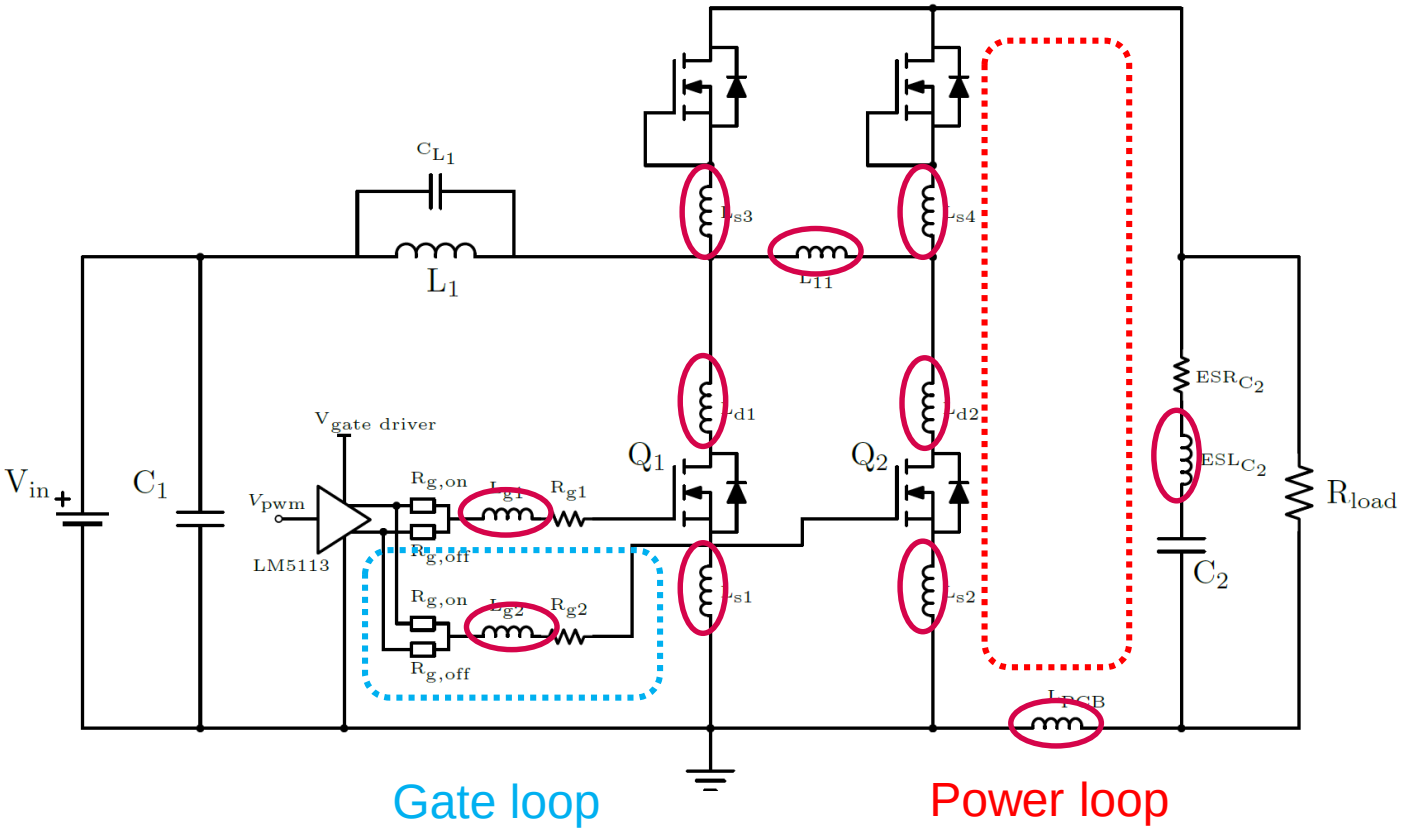

Approach of modelling

- Extraction of the parameters values
- Simulation
- Measurements
- Verifying

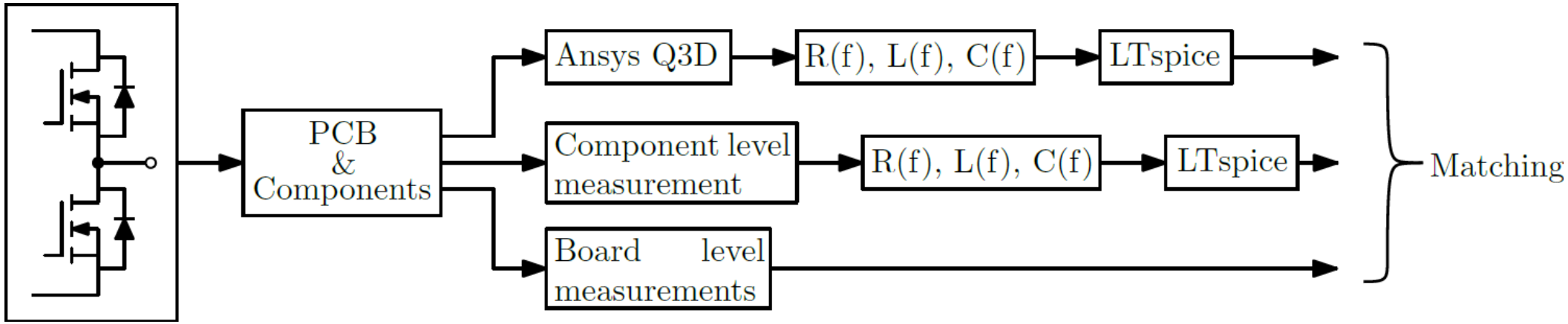

Model of passive components

- Wide frequency range

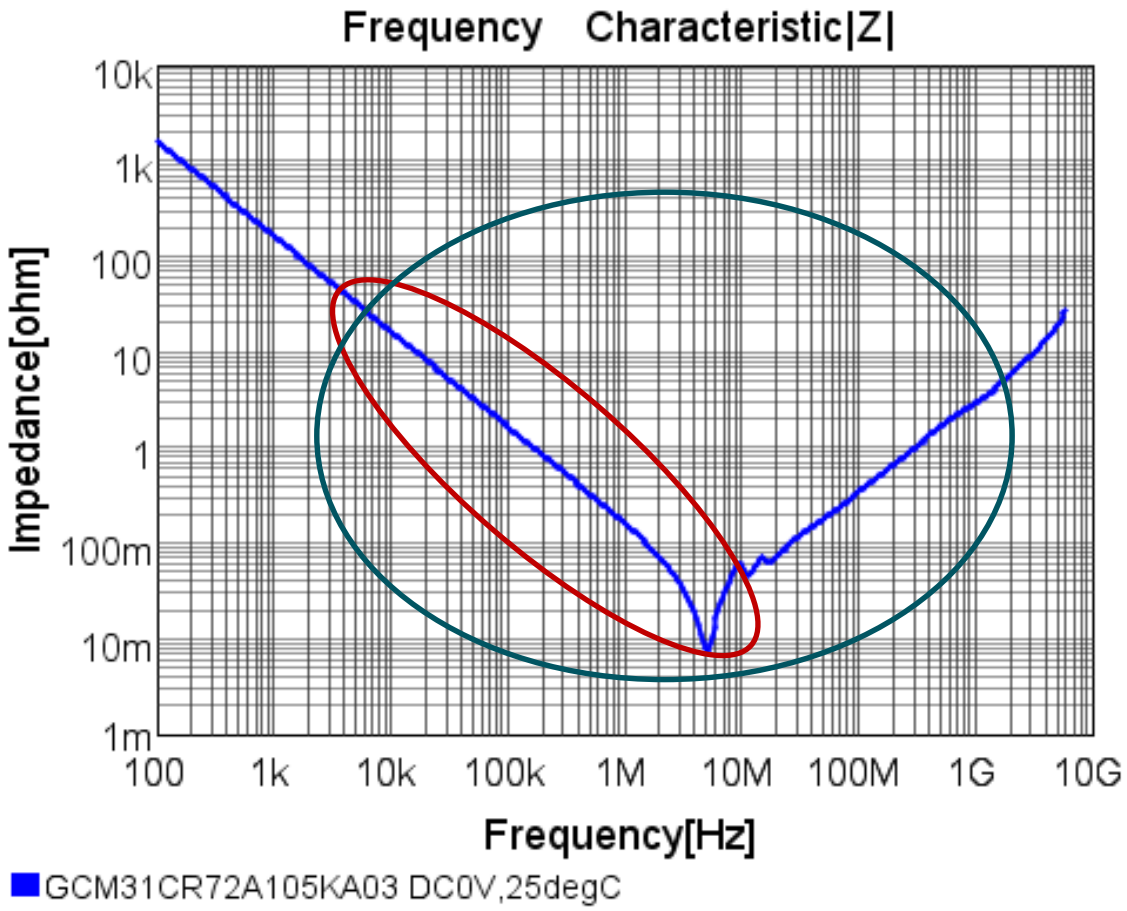

Relevant for:

Si MOSFET

GaN

Models

- Models for needed frequency (GHz) range don't exist!

Boost Converter

- Five slightly different circuits

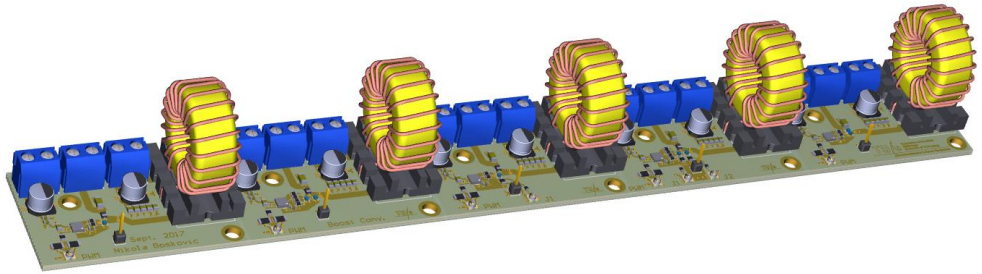

- Most important two are:

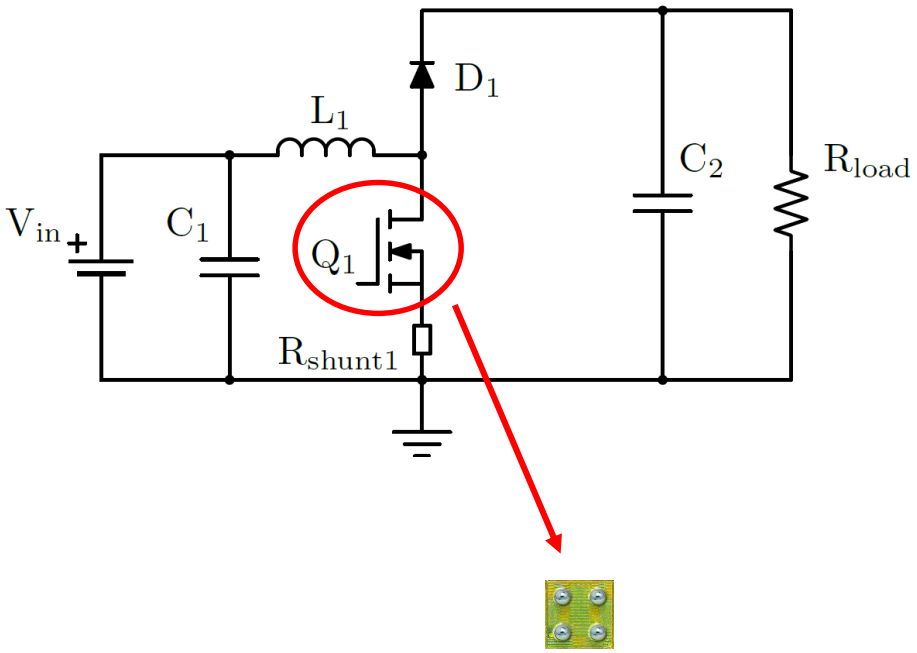

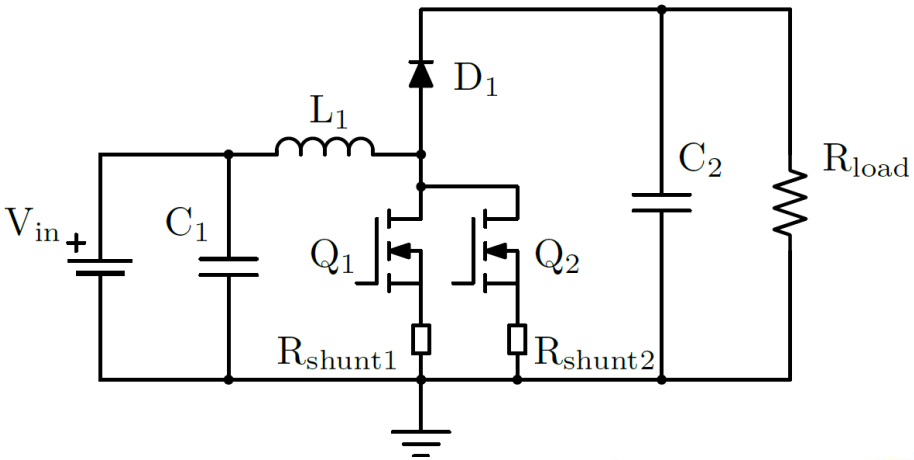

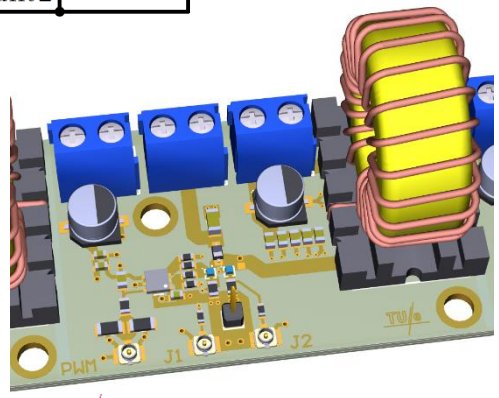

Transistor is in BGA package, 0.9 mm x 0.9 mm

Boost Converter

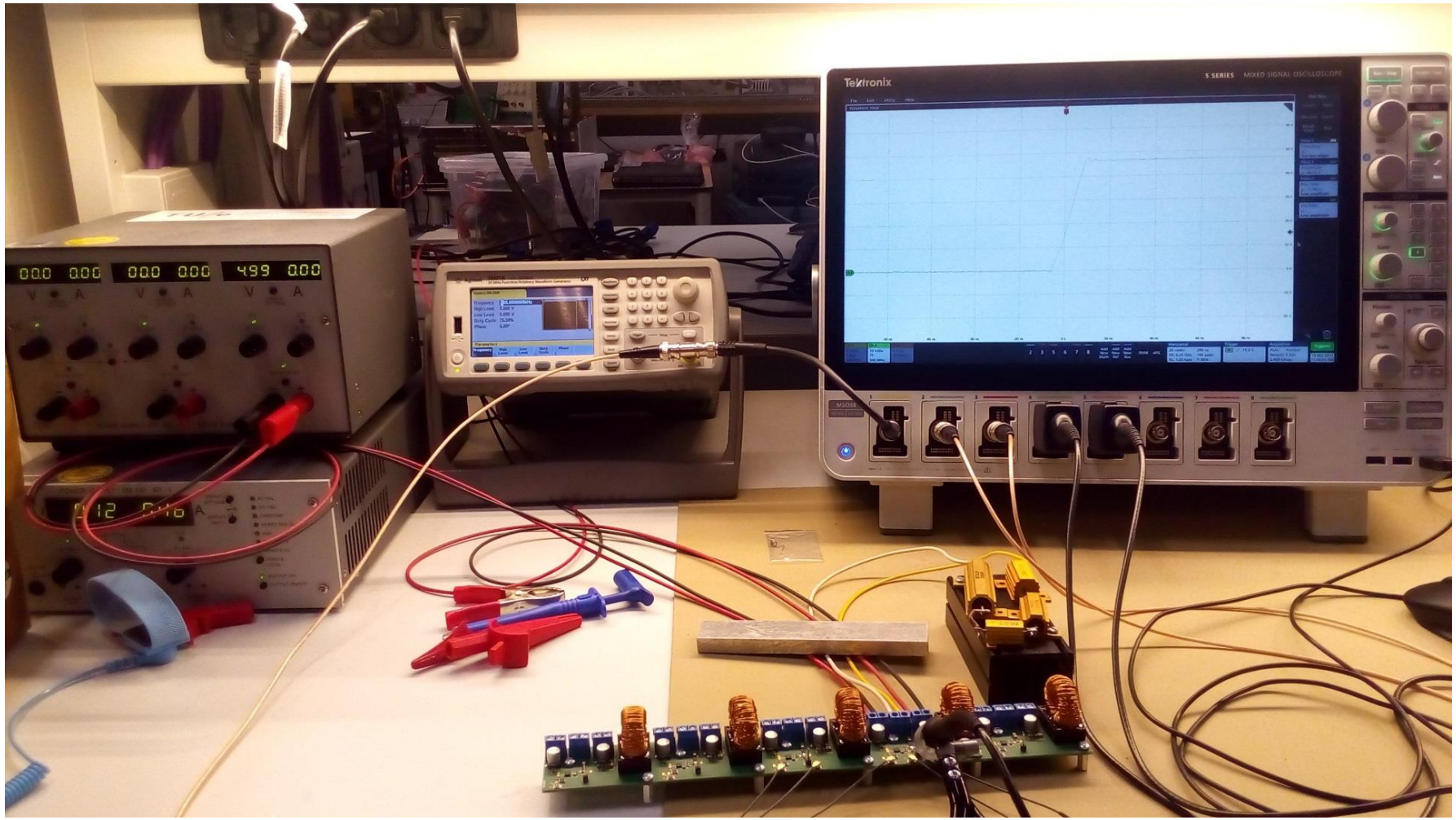

Prototype

Measurements

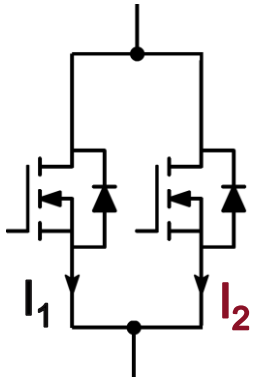

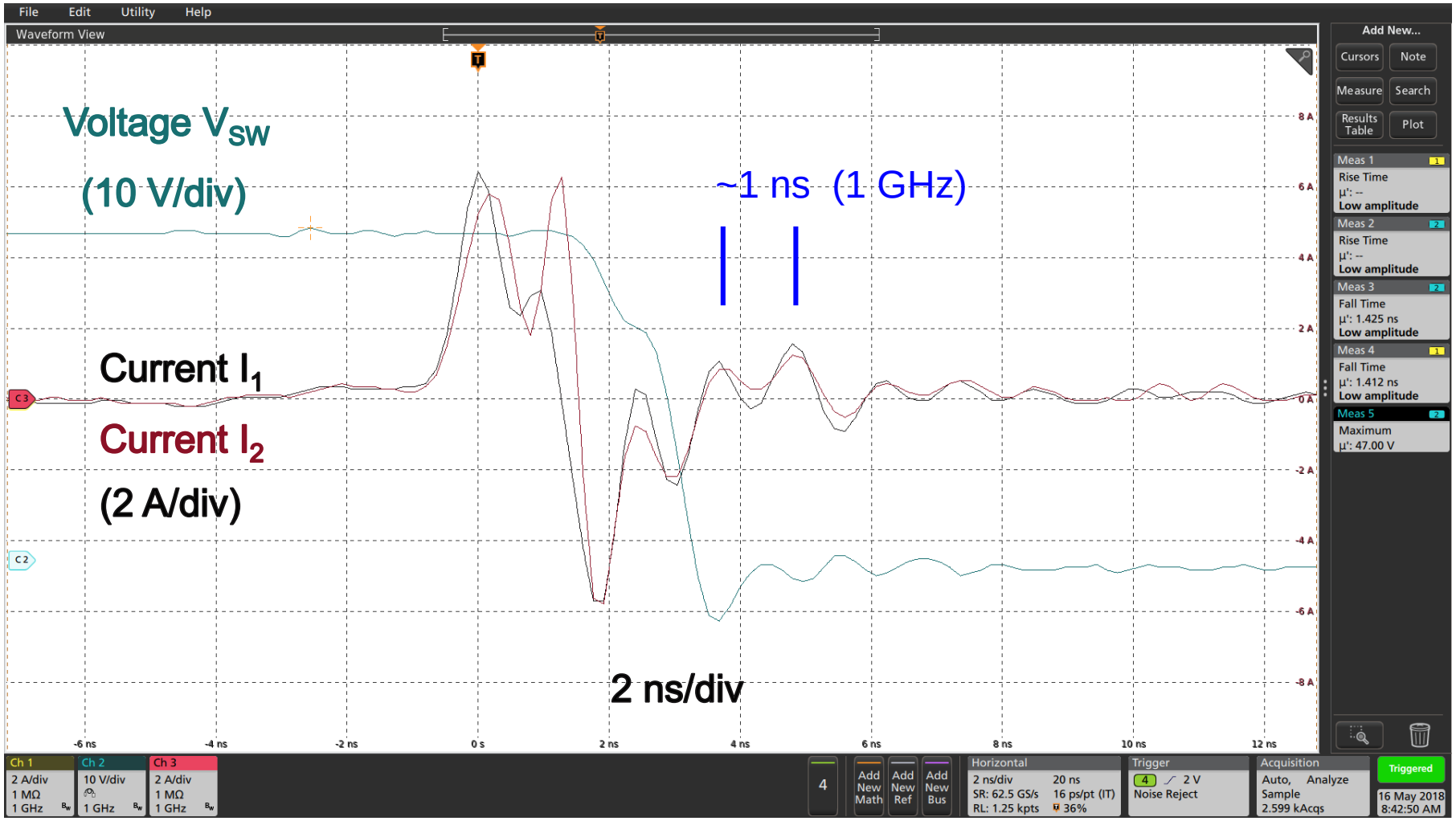

Conclusions

- Gallium Nitride transistors are beneficial in terms of lower losses.
- Measurement uncertainty – 1 GHz oscillation!
- Impossible to verify parameters.
- Prediction of current for very high number of paralleled transistors.
- Too many uncertainties for the generalized conclusions.
- Different route should be taken.

Alternative approach

- Paralleling of half bridges by inductances

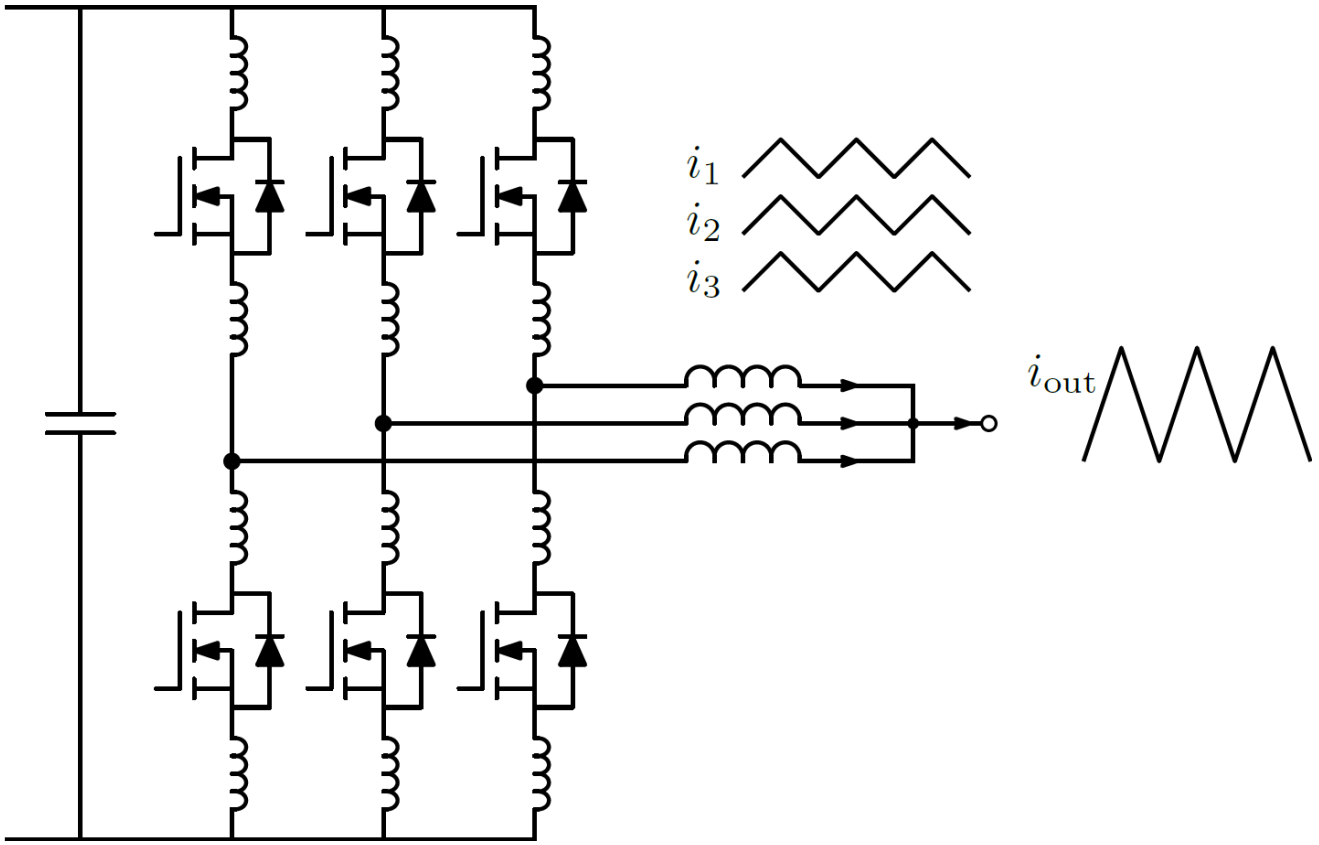

Thank you for your attention!

Nikola Boskovic

n.boskovic@tue.nl

Electromechanics & Power Electronics (**EPE**) group

electromechanics power electronics
e/pe

TU/e Technische Universiteit Eindhoven University of Technology
Electromechanics & Power Electronics