WE Backup Your Application:
Hot Swappable Supercapacitor Backup Solution

WÜRTH ELEKTRONIK eiSos GROUP

PRINTED CIRCUIT BOARDS

INTELLIGENT POWER AND CONTROL SYSTEMS

Passive Components

Power Modules & Optoelectronics

Electromechanical Components

Automotive & eMobility

Wireless Connectivity & Sensors

WÜRTH ELEKTRONIK
MORE THAN YOU EXPECT

Power Electronics & Energy Storage event
POWER ELECTRONICS 2022
ENERGY STORAGE EVENT 2022
14 juni 2022 | 1931 Congrescentrum 's-Hertogenbosch

Agenda

- Short Roundup about Supercapacitors
  - Classification of Supercapacitors
  - Model Parameters and Performance
  - Charge-, Discharge and Frequency Behavior

- WE Backup Your Application
  - Hot Swappable Supercapacitor Backup Solution
  - Overview and General Information
  - Design-In Process and Lifetime
  - Performance of the Complete Solution

WÜRTH ELEKTRONIK
MORE THAN YOU EXPECT

Power Electronics & Energy Storage event
POWER ELECTRONICS 2022
ENERGY STORAGE EVENT 2022
14 juni 2022 | 1931 Congrescentrum 's-Hertogenbosch

Classification of Capacitors

Types of Supercapacitors based on design of electrodes:

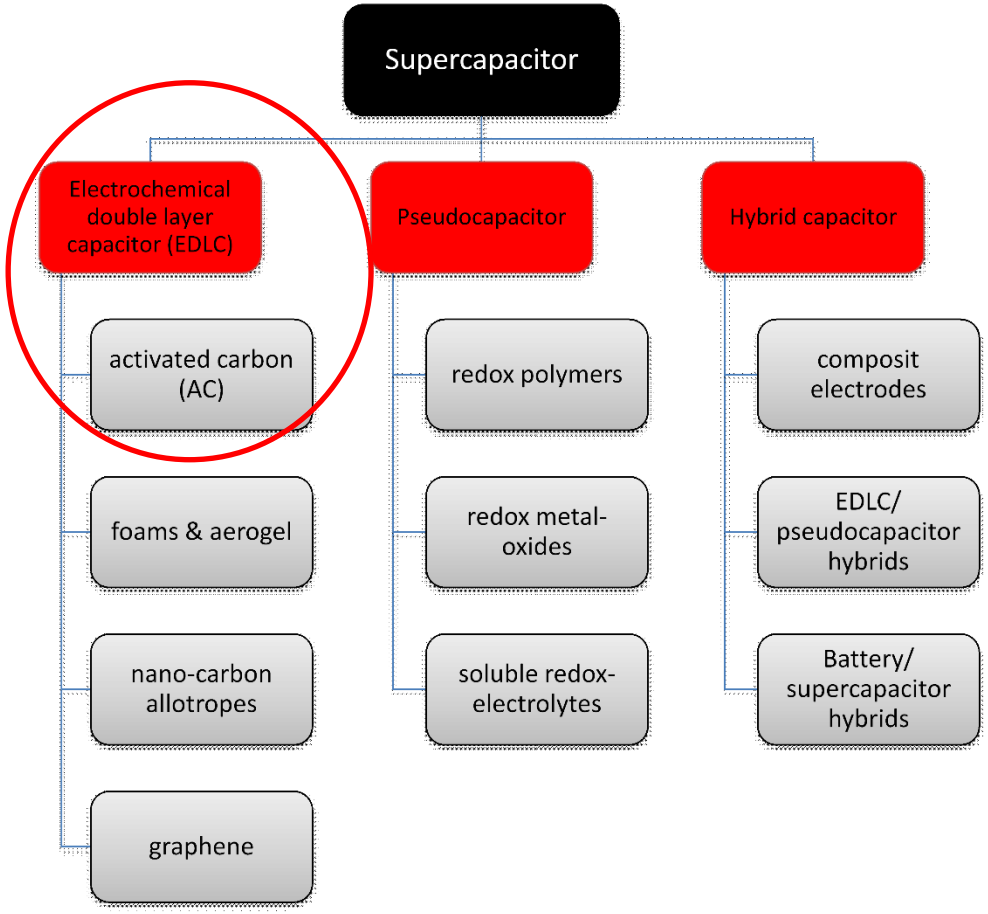

- Double Layer Capacitors
  - Electrodes: carbon or carbon derivatives
- Pseudocapacitors
  - Electrodes: oxides or conducting polymers (high faradaic pseudocapacitance)
- Hybrid capacitors
  - Electrodes: special electrodes with significant double-layer capacitance and pseudocapacitance

WÜRTH ELEKTRONIK MORE THAN YOU EXPECT
Power Electronics & Energy Storage event
POWER ELECTRONICS 2022
ENERGY STORAGE EVENT 2022
14 juni 2022 | 1931 Congrescentrum 's-Hertogenbosch

Supercapacitors vs. Batteries and Capacitors

Capacitors

- **Very fast charging** and discharging (≪ sec)
- Very high power output
- Very low energy capacity

Supercaps

- **Fast charging** and discharging (min – sec)
- High life cycle (≈ 500,000 cycles)
- High power output
  - ≈ 10 times higher than Li-ion battery
- Low energy capacity
  - ≈ 30 times lower than Li-ion battery
- Energy: 0.002 Wh – 0.04 Wh
- Power: 36 W – 90 W

Batteries

- **Long charging** time (hours)
- High energy capacity
- Low power output
- Energy: 1.4 Wh
- Power: 6 W

WÜRTH ELEKTRONIK
MORE THAN YOU EXPECT

Power Electronics & Energy Storage event
POWER ELECTRONICS 2022
ENERGY STORAGE EVENT 2022
14 juni 2022 | 1931 Congrescentrum 's-Hertogenbosch

Parameters and Performance

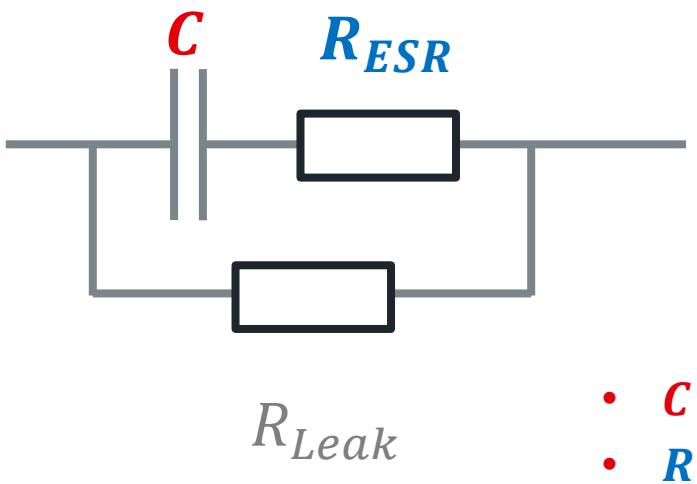

Basic Parameters:

- U_r, **Rated Voltage:**
  - is not determined by the equivalent circuit but by electrochemistry (Decomposition Voltage)
    - Non-Aqueous Electrolyte (typ.): $\approx 2\,V \;\ldots\; 3V$
    - Aqueous Electrolyte (typ.): $\approx 1.5\,V$
- C **=> Capacitance**
- R_{ESR}**=> ESR**
- R_{Leak} **=> Leakage**
  - Influence on charge storing capabilities ($R_{Leak} \approx 10\,\mathrm{k\Omega} \ldots 1\,\mathrm{M\Omega}$)

Performance Parameters:

- **Energy storage capacity:**

$$E = \frac{1}{2} \times C \times U_r^2$$

- **Maximum Power output:**

$$P_{max} = \frac{U_r^2}{4\,R_{ESR}}$$

- **Characteristic R-C Time:**

$$\tau = R_{ESR} \times C$$

WÜRTH ELEKTRONIK
MORE THAN YOU EXPECT

Power Electronics & Energy Storage event
POWER ELECTRONICS 2022
ENERGY STORAGE EVENT 2022
14 juni 2022 | 1931 Congrescentrum 's-Hertogenbosch

Charge and Discharge Behavior

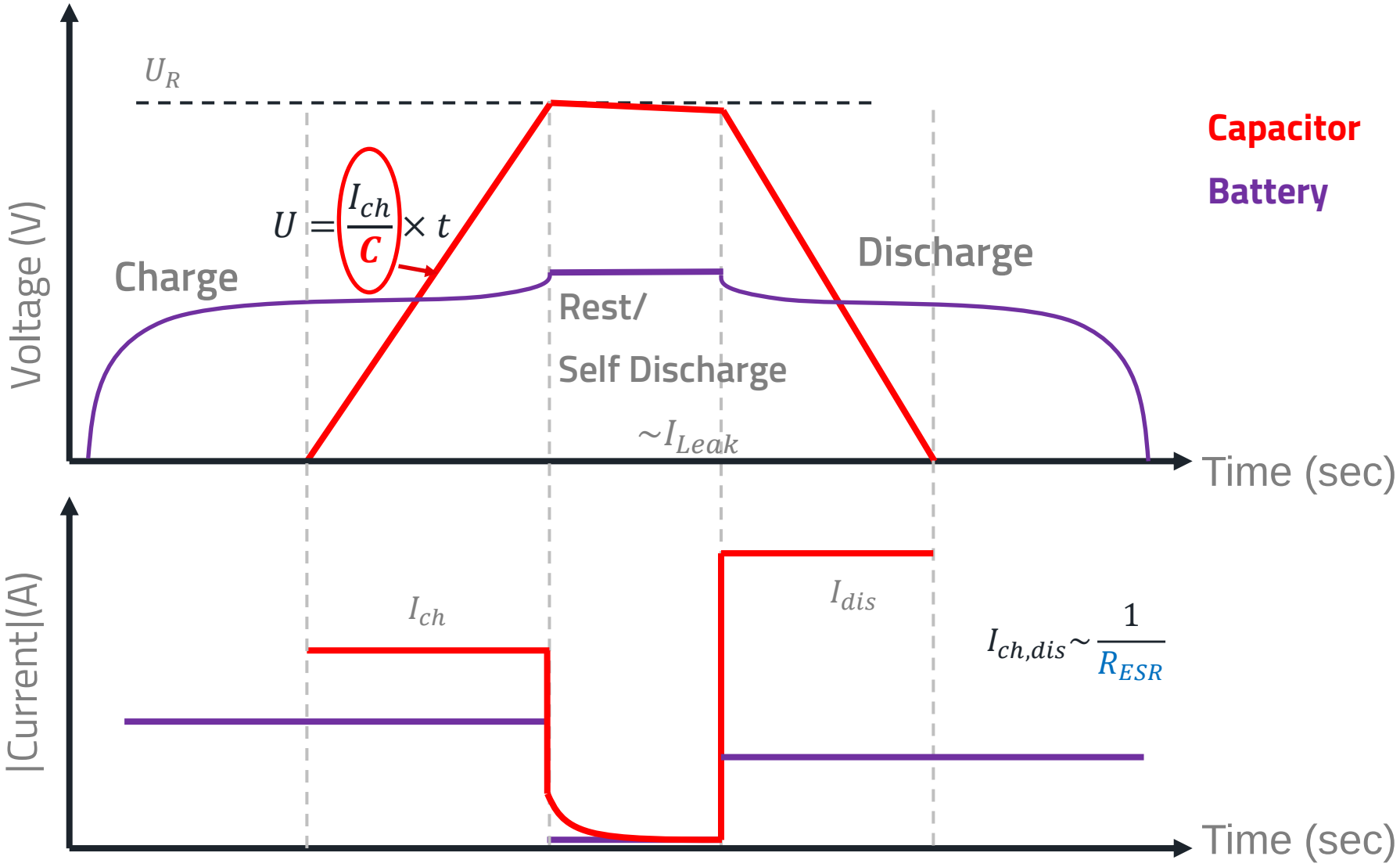

WÜRTH ELEKTRONIK MORE THAN YOU EXPECT
Power Electronics & Energy Storage event
POWER ELECTRONICS 2022
ENERGY STORAGE EVENT 2022
14 juni 2022 | 1931 Congrescentrum 's-Hertogenbosch

Agenda

- Short Roundup about Supercapacitor
  - Classification of Supercapacitors
  - Model Parameters and Performance
  - Charge-, Discharge and Frequency Behavior

- WE Backup Your Application
  - Hot Swappable Supercapacitor Backup Solution
  - Overview and General Information
  - Design-In Process and Lifetime
  - Performance of the Complete Solution

WÜRTH ELEKTRONIK
MORE THAN YOU EXPECT

Power Electronics & Energy Storage event
POWER ELECTRONICS 2022
ENERGY STORAGE EVENT 2022
14 juni 2022 | 1931 Congrescentrum 's-Hertogenbosch

Specification of the application

Schematic

- 24V input to output rail
- Step-Up mode V_{out}
  - V_{out} = 12 V
- Step-Down mode V_{CAP}
  - 4 Supercapacitors
  - V_{CAP} = 10.6 V
- No direct supply from V_{CAP}
  - $V_{CAP} < V_{out}$
- f_{sw}
  - 450 kHz
- Input current limit
  - I_{max_charge} = 2,5 A

- Constant Power Discharge
- Supply the load and charge the Supercapacitor

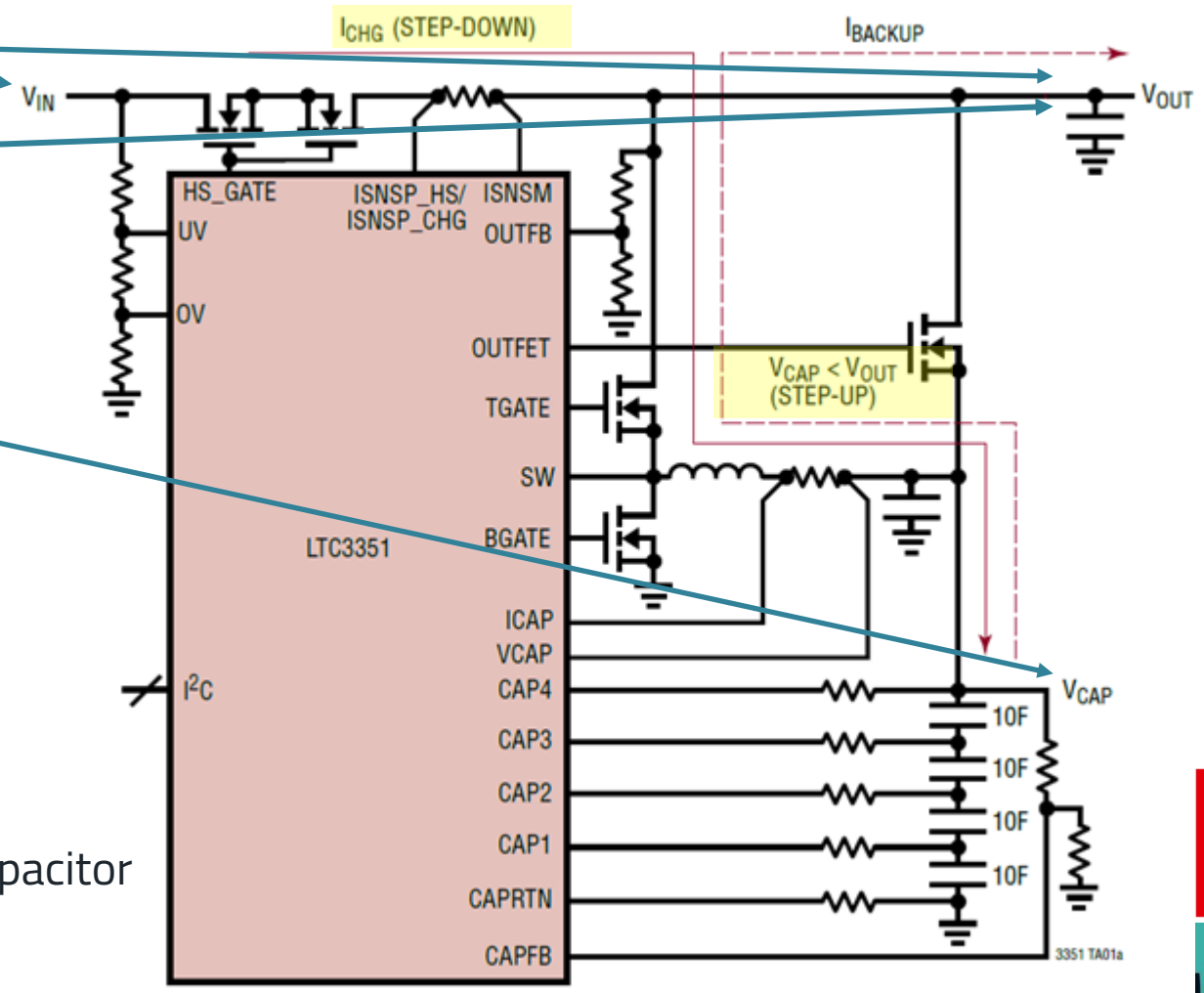

WÜRTH ELEKTRONIK
MORE THAN YOU EXPECT
Power Electronics & Energy Storage event
POWER ELECTRONICS 2022
ENERGY STORAGE EVENT 2022
14 juni 2022 | 1931 Congrescentrum 's-Hertogenbosch

Specification of the application

Efficiency

- 24V input to output rail
- Step-Up mode V_{out}
  - V_{out} = 12 V
- Step-Down mode V_{CAP}
  - 4 Supercapacitors
  - V_{CAP} = 10.6 V
- No direct supply from V_{CAP}
  - $V_{CAP} < V_{out}$
- f_{sw}
  - 450 kHz
- Input current limit
  - I_{max_charge} = 2,5 A

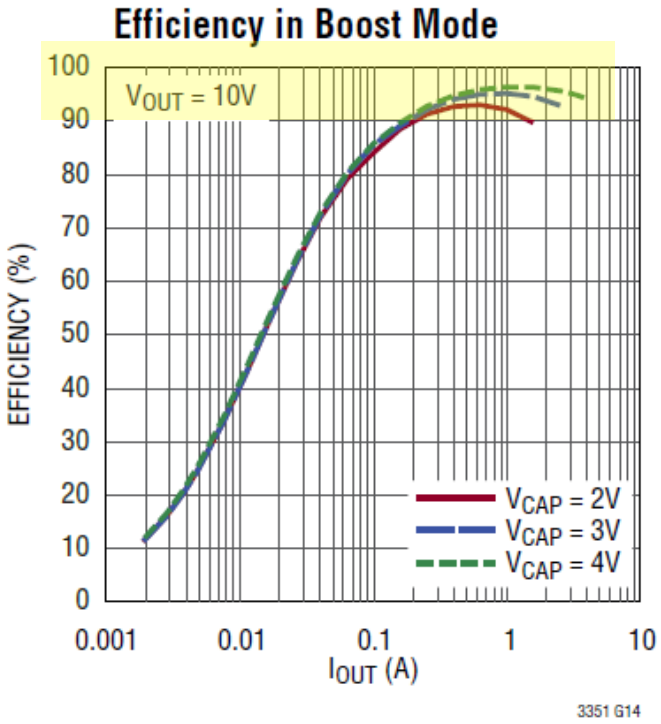

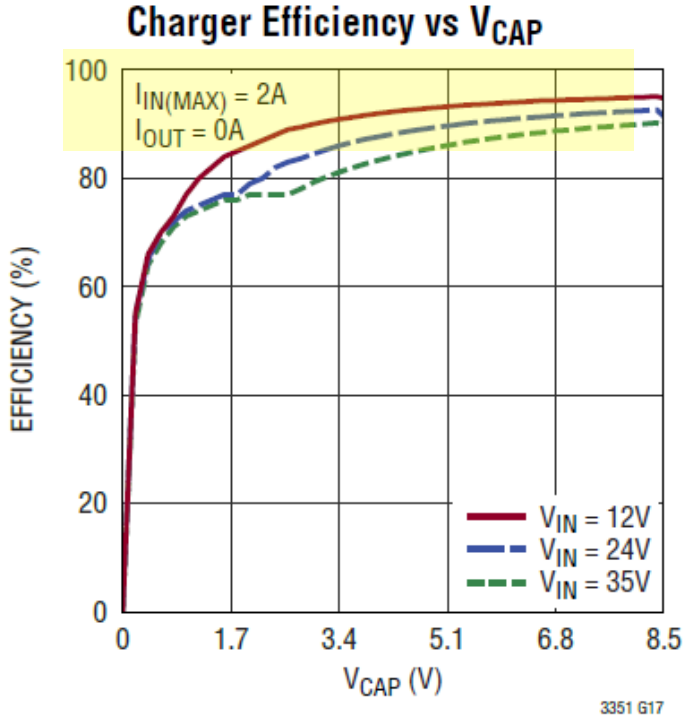

- Constant Power Discharge
- Supply the load and charge the Supercapacitor

WÜRTH ELEKTRONIK
MORE THAN YOU EXPECT
Power Electronics & Energy Storage event
POWER ELECTRONICS 2022
ENERGY STORAGE EVENT 2022
14 juni 2022 | 1931 Congrescentrum 's-Hertogenbosch

How to choose the Supercapacitor?

- Backup is defined due to the application
- The four steps of design-in
  - Choose the mode of discharge
    - Constant Power / Constant Resistance / Constant Current
  - Calculate the capacitance (operating time, output power, output current)
    - 30 W => 12 V @ 2.5 A for 15 sec.
    - E = P * t = 30 W * 15 s = 450 J
    - $C = 2 \cdot \frac{E}{V_1^2 - V_2^2} = 2 \cdot \frac{450\ J}{10.6\ V^2 - 2V^2} = 4.2\ F$
  - Identify the suitable charging process
    - Constant Current / Constant Power / Constant Voltage
  - Calculate charging current
    - Highest possible current for the LTC3351 => 6,4A

WÜRTH ELEKTRONIK MORE THAN YOU EXPECT
Power Electronics & Energy Storage event
POWER ELECTRONICS 2022
ENERGY STORAGE EVENT 2022
14 juni 2022 | 1931 Congrescentrum 's-Hertogenbosch

How to choose the Supercapacitor?

Discharging process

Constant Resistance

Eg. E-motor

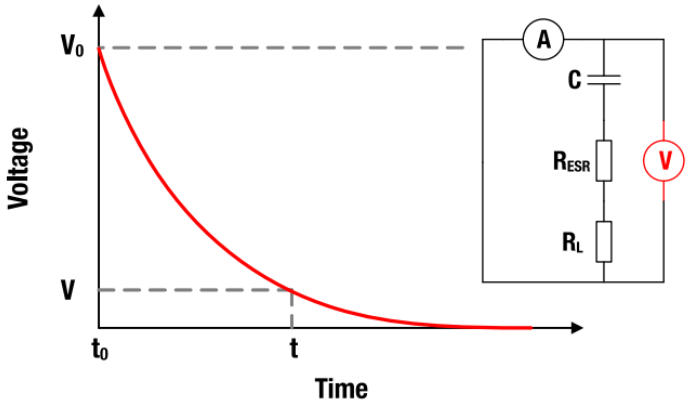

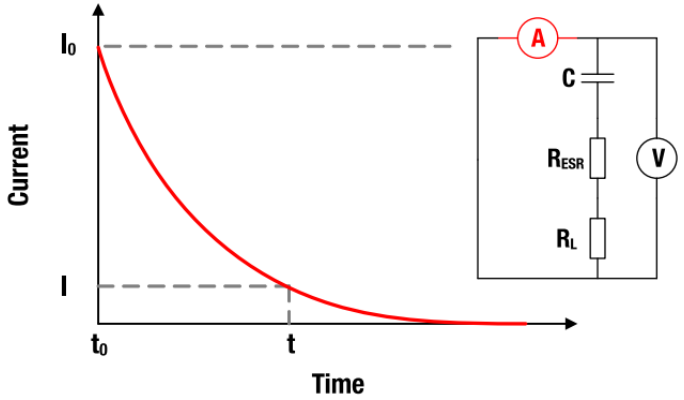

Constant Current

Eg. LED driver

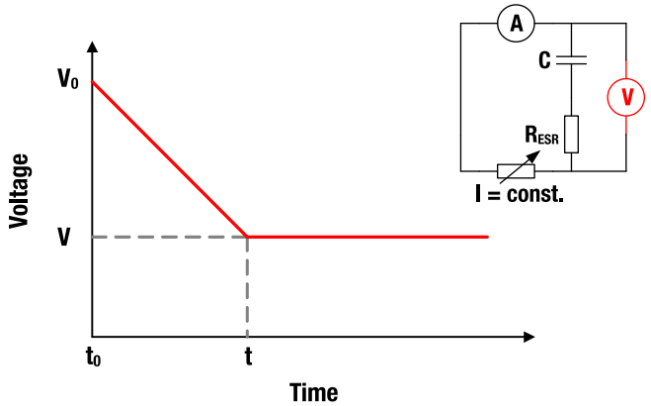

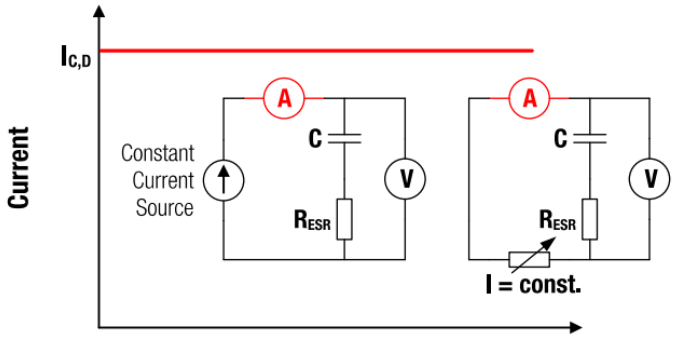

Constant Power

Eg. DC/DC converter

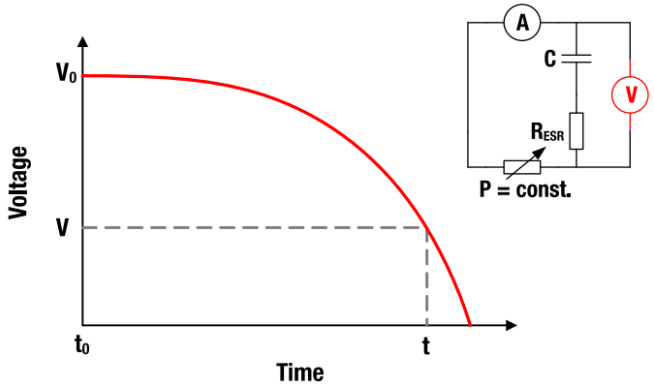

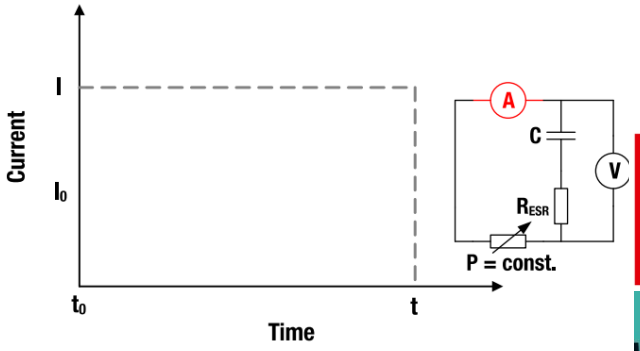

WÜRTH ELEKTRONIK
MORE THAN YOU EXPECT
Power Electronics & Energy Storage event
POWER ELECTRONICS 2022
ENERGY STORAGE EVENT 2022
14 juni 2022 | 1931 Congrescentrum 's-Hertogenbosch

How to choose the Supercapacitor?

Charging process: constant voltage versus constant current

Constant voltage

- Easy to implement
- More time needed to full charge

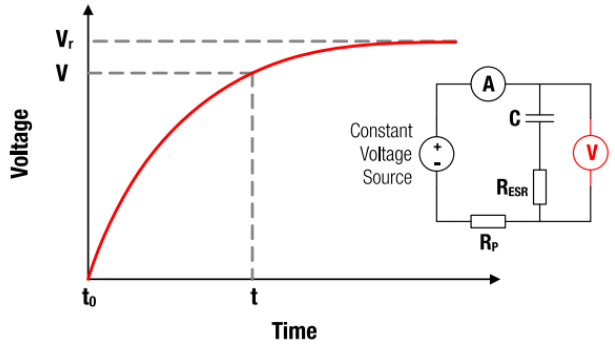

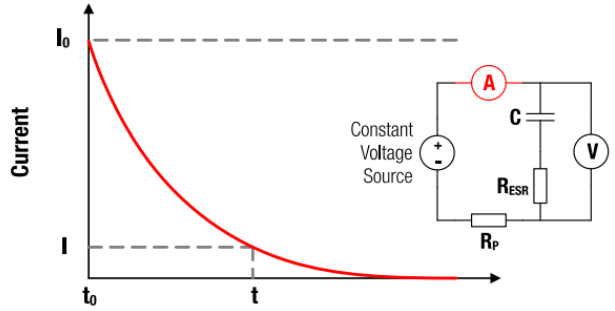

Constant current

- More complex
- Faster charging

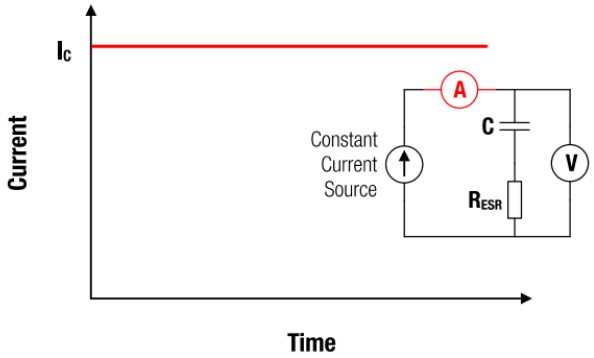

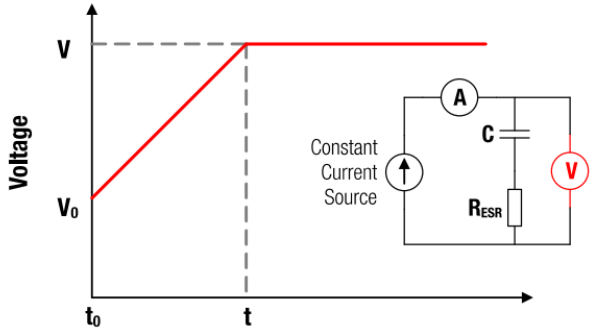

WÜRTH ELEKTRONIK
MORE THAN YOU EXPECT
Power Electronics & Energy Storage event
POWER ELECTRONICS 2022
ENERGY STORAGE EVENT 2022
14 juni 2022 | 1931 Congrescentrum 's-Hertogenbosch

Choosing the right Supercapacitor

- WE use 50F / 2.7V Supercapacitor radial type 850617022002

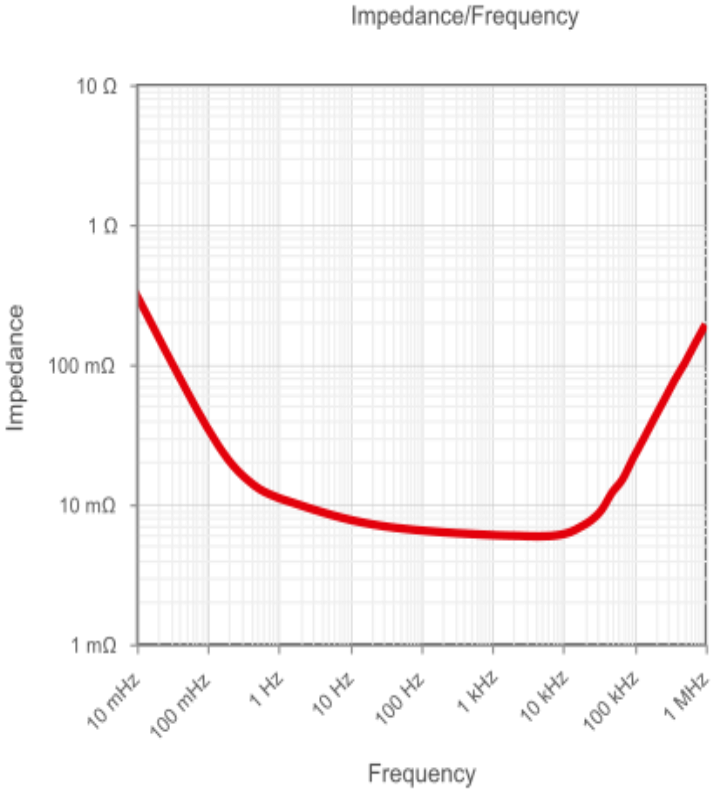

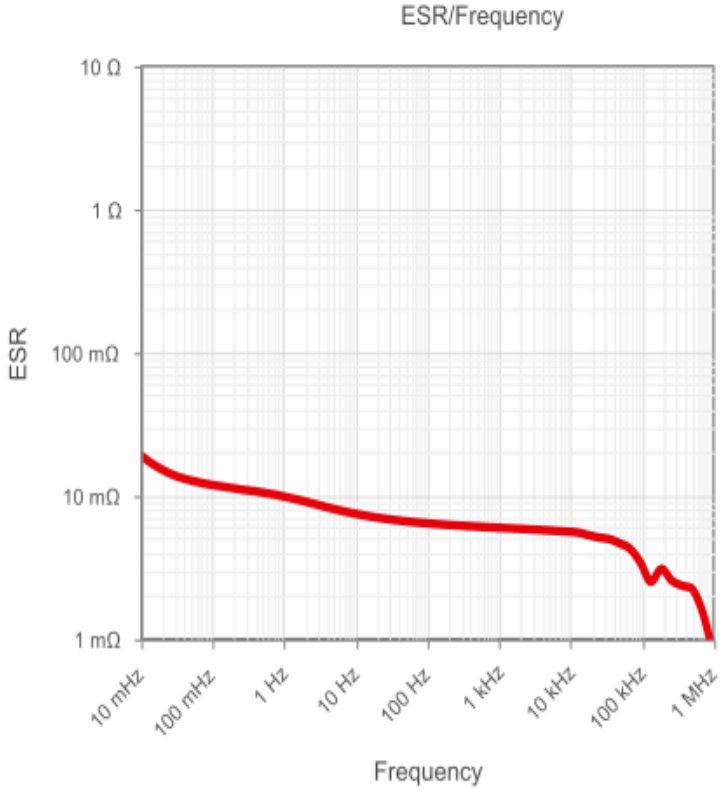

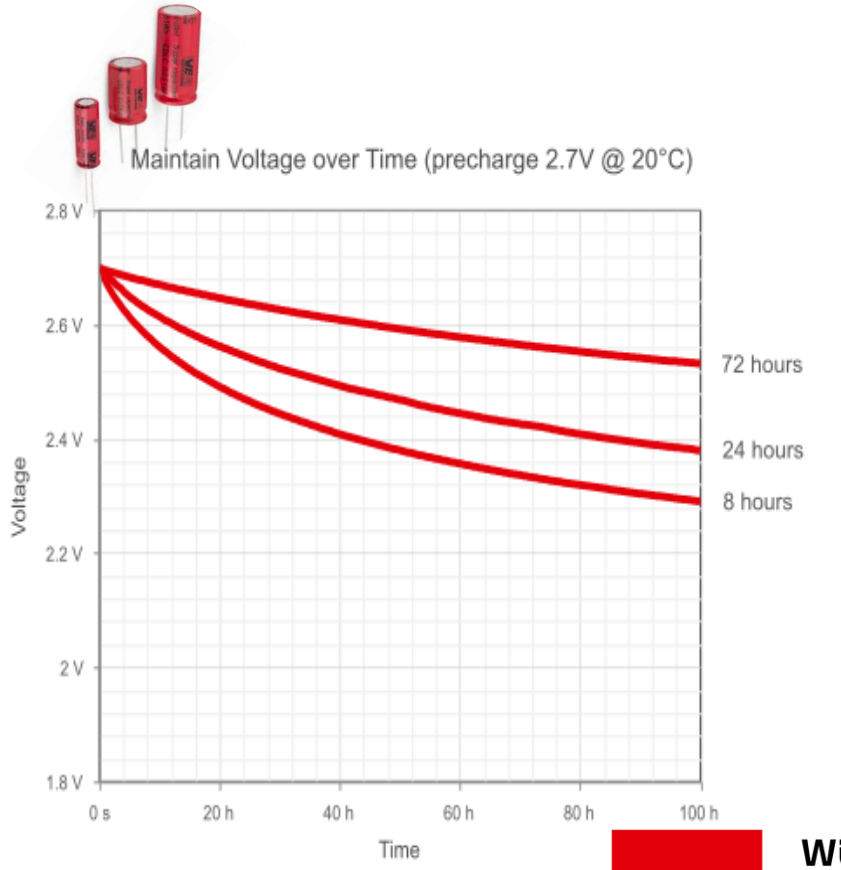

WÜRTH ELEKTRONIK
MORE THAN YOU EXPECT

Power Electronics & Energy Storage event
POWER ELECTRONICS 2022
ENERGY STORAGE EVENT 2022
14 juni 2022 | 1931 Congrescentrum 's-Hertogenbosch

Supercapacitor Bank

Schematic

- 4 Supercapacitors in series connection

- $E_{total} = ½ * C_{total} * U_{VCAP}^2$
  - C_{total} = 12,5 F
  - U_{VCAP} = 10.6 V

  $\Rightarrow E_{total}$ = 702.25 J

- Max. Power = U_r^2 / 4 * (4 * ESR)
  - **V_{CAP} = 10.6 V**
  - **ESR for one Supercapacitor = 2.23 mΩ**
  - **Max. Power = 3053 W**

- No balancing on board required
  - LTC3351 integrated active stack balancer

- Additional circuitry is for discharging the bank

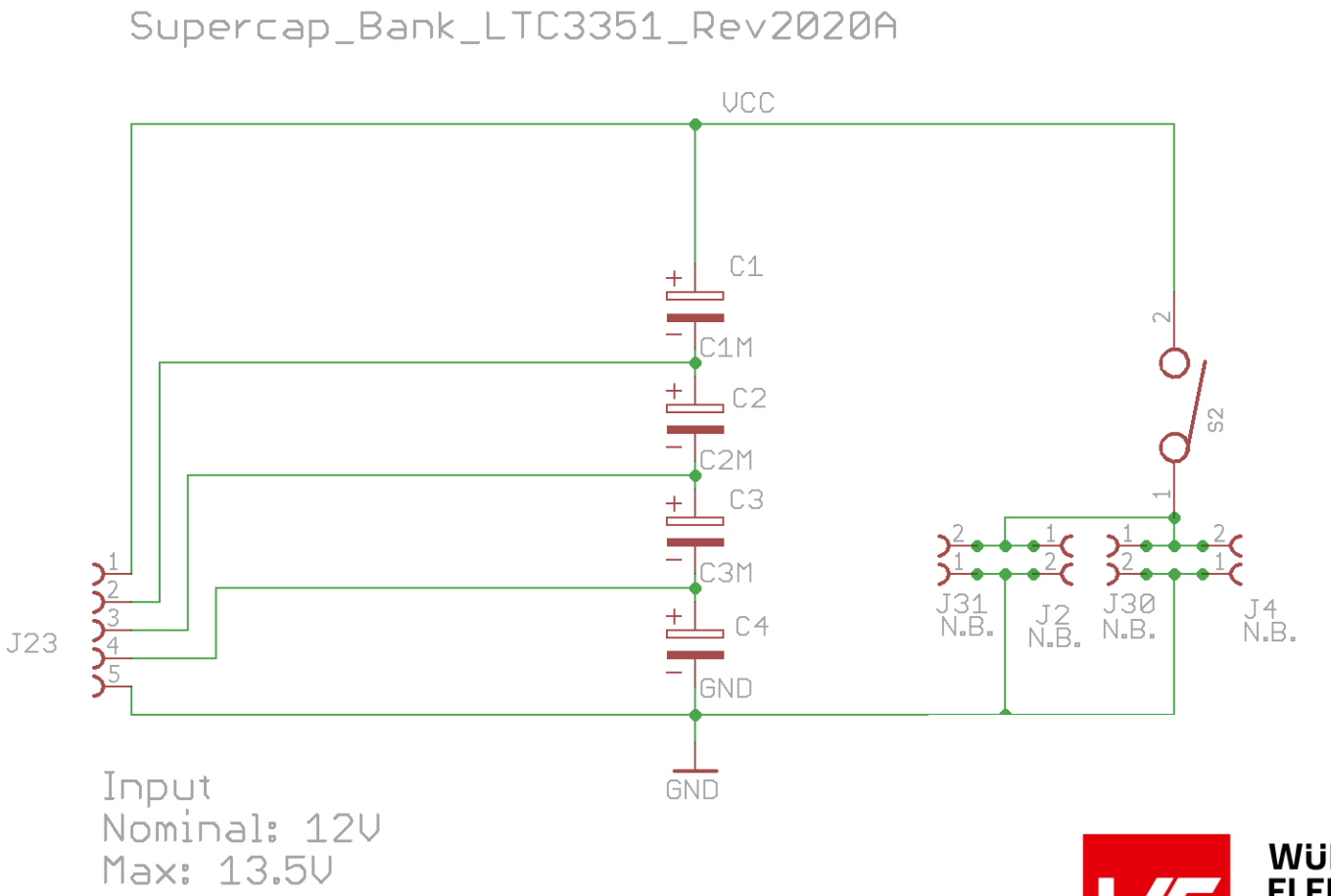

WÜRTH ELEKTRONIK
MORE THAN YOU EXPECT
Power Electronics & Energy Storage event
POWER ELECTRONICS 2022
ENERGY STORAGE EVENT 2022
14 juni 2022 | 1931 Congrescentrum 's-Hertogenbosch

Supercapacitor Bank

PCB Lay-out

- 4 Supercapacitors in series connection
- $E_{total} = ½ * C_{total} * U_{VCAP}^2$
  - C_{total} = 12,5 F
  - U_{VCAP} = 10.6 V

  $\Rightarrow E_{total}$ = 702.25 J
- Max. Power = U_r^2 / 4 * (4 * ESR)
  - **V_{CAP} = 10.6 V**
  - **ESR for one Supercapacitor = 2.23 mΩ**
  - **Max. Power = 3053 W**
- No balancing on board required
  - LTC3351 integrated active stack balancer
- Additional circuitry is for discharging the bank

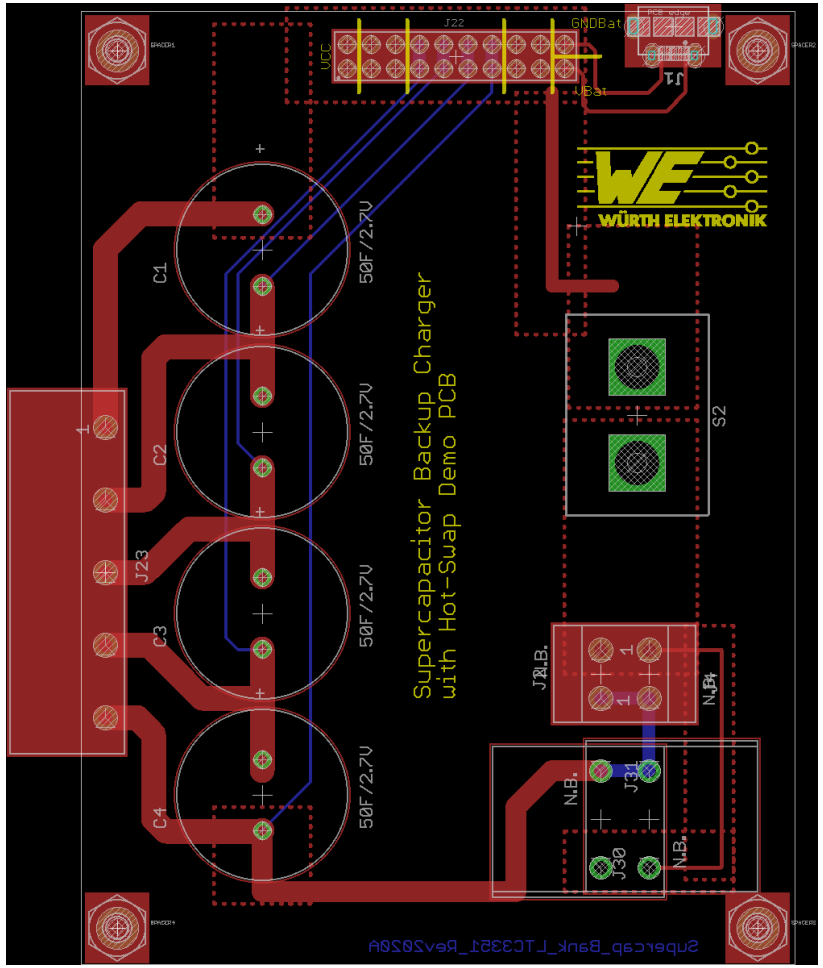

WÜRTH ELEKTRONIK
MORE THAN YOU EXPECT
Power Electronics & Energy Storage event
POWER ELECTRONICS 2022
ENERGY STORAGE EVENT 2022
14 juni 2022 | 1931 Congrescentrum 's-Hertogenbosch

Balancing of Supercapacitor

- Worst Case Example:
  - Two in series connected capacitors with a rated capacitance of 10 F (tol.: -10%, +30%)
  - Rated voltage of 2.7 V are charged at 5.4 V

- Following equations are need for the calculations:

  - $\mathrm{U_g} = U_1 + U_2$
  - $U_2 = \frac{q}{c_2}$ and $U_1 = \frac{q}{c_1}$

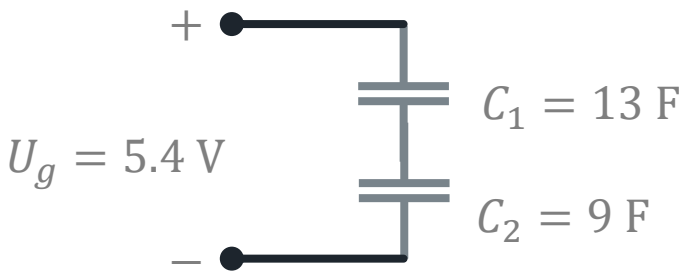

  - $\rightarrow U_1 = \frac{5.4\ \mathrm{V}}{(1.44+1)} = \mathbf{2.21V}$
  - $\rightarrow U_2 = \frac{5.4\ \mathrm{V}}{\left(\frac{1}{1.44}+1\right)} = \mathbf{3.19V}$ (Caution, Overvoltage!)

WÜRTH ELEKTRONIK MORE THAN YOU EXPECT
Power Electronics & Energy Storage event
POWER ELECTRONICS 2022
ENERGY STORAGE EVENT 2022
14 juni 2022 | 1931 Congrescentrum 's-Hertogenbosch

Balancing of Supercapacitor

Passive versus active balancing

- **Passive Balancing**
  - If operated primarily under DC conditions
  - Low cost
  - Slow balancing
  - High losses
  - Balance Resistor: $R_{b,p} \approx \frac{1}{10} \times \frac{U_r}{I_{Leak}}$
  - Typically $R_{b,a} \approx 1\text{k}\Omega \ldots 100\text{k}\Omega$

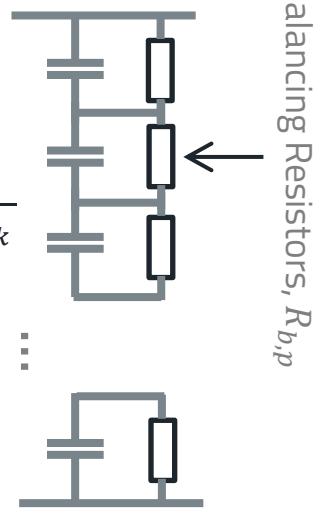

$R_{b,p}$	↓	↑
Balancing Speed	↑	↓
Losses	↑	↓

- **Active Balancing**
  - If often charged and discharged
  - High cost
  - Fast balancing
  - Low losses
  - Balance Resistor:
    $R_{b,a} > R_{b,p}$
  - Typically $R_{b,a}$
    $\approx 1M\Omega \ldots 10\text{M}\Omega$?

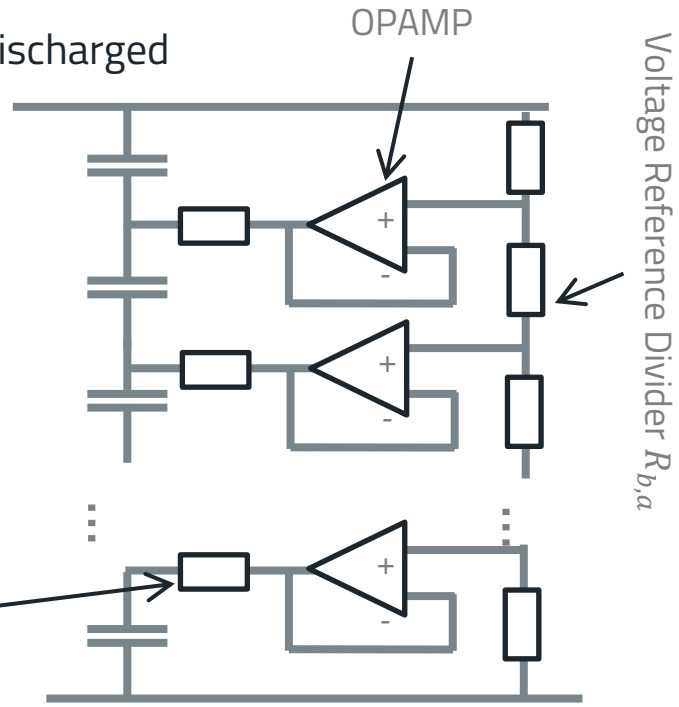

WÜRTH ELEKTRONIK
MORE THAN YOU EXPECT
Power Electronics & Energy Storage event
POWER ELECTRONICS 2022
ENERGY STORAGE EVENT 2022
14 juni 2022 | 1931 Congrescentrum 's-Hertogenbosch

Lifetime of Supercapacitor

- Supercapacitors lose capacitance as they age
- ESR will rise over the lifetime

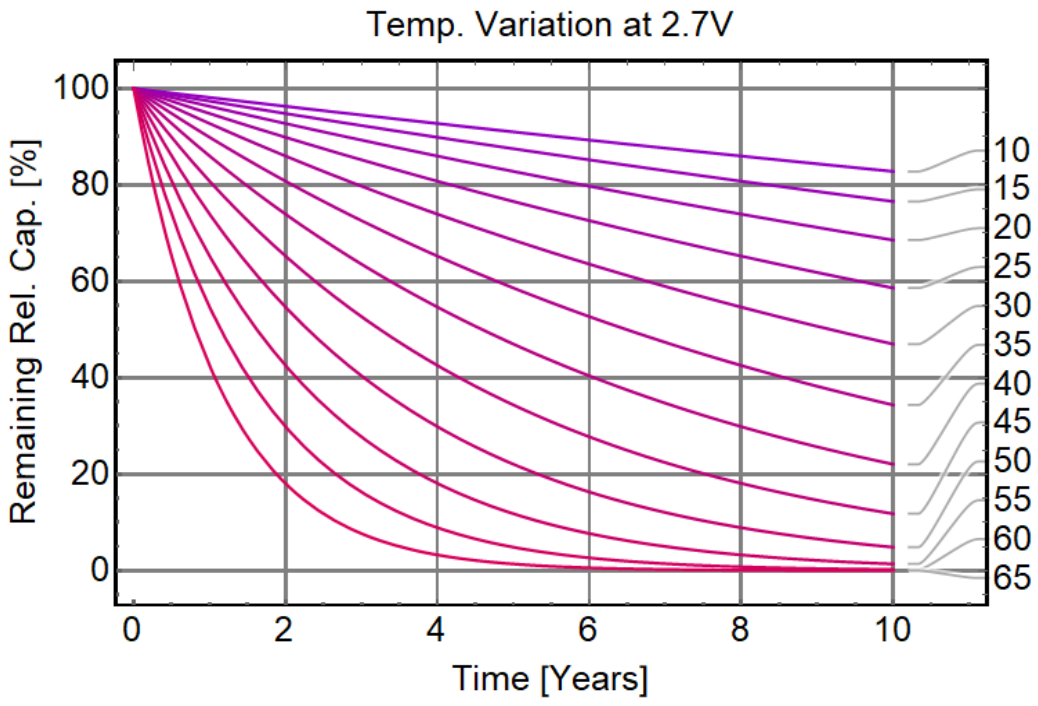

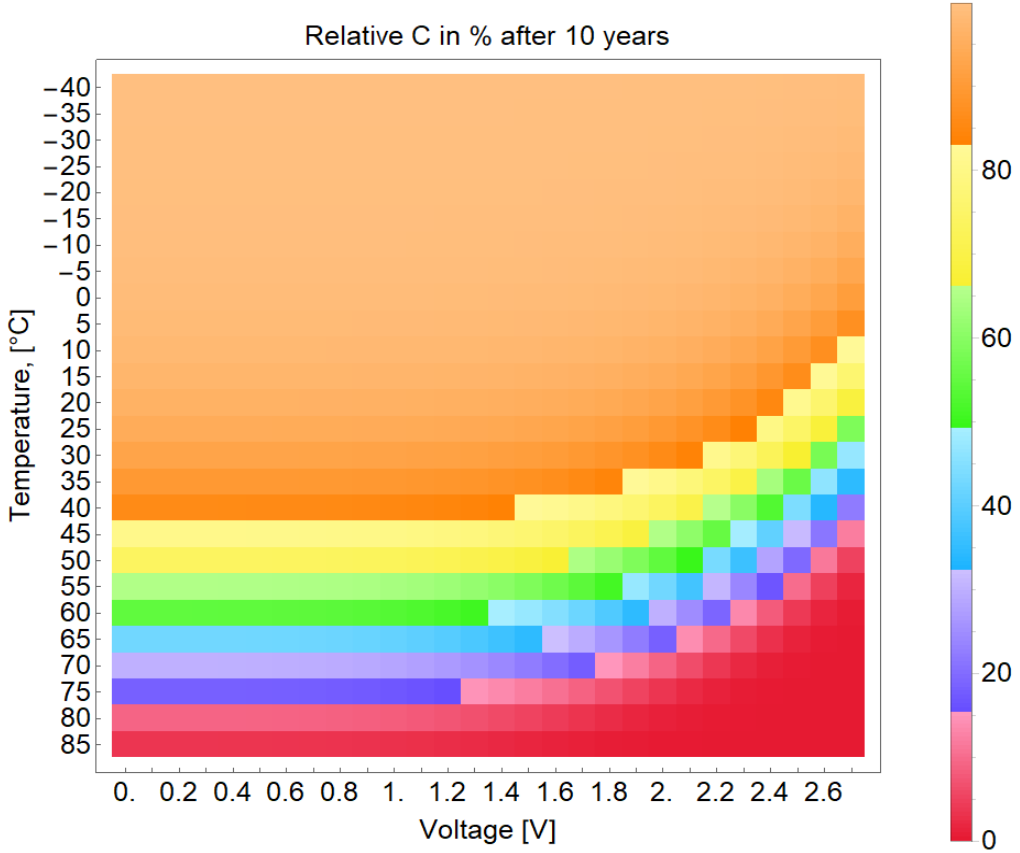

WÜRTH ELEKTRONIK
MORE THAN YOU EXPECT
Power Electronics & Energy Storage event
POWER ELECTRONICS 2022
ENERGY STORAGE EVENT 2022
14 juni 2022 | 1931 Congrescentrum 's-Hertogenbosch

Lifetime of Supercapacitor

- Lifetime for 4 Supercapacitors in series
- V_{CAP} = 10.6 V
  - Voltage on a single cell => 2,65 V
- Defined Mission Profile
  - Max. Temp = 40 °C
  - Max. Voltage = 2.65 V
- We use 4 * 50 F Supercapacitors in series
  - C_{total} = 12,5 F
  - With a tolerance of -10% => C_{total} = 11.25 F
- After 12 years => C_{total} = 5.6 F
  - Calculated capacitance 4.2 F
  - Lifetime definition -30% capacitance and 2x ESR
- Lifetime depends on voltage and temperature
- Current increases self heating

Mission Profile			
Time [h]	Temp. [°C]	Voltage [V]	Model
10	40	2.65	DC Voltage Model
2	40	1.	DC Voltage Model
6	25	0	DC Voltage Model
6	25	0	DC Voltage Model

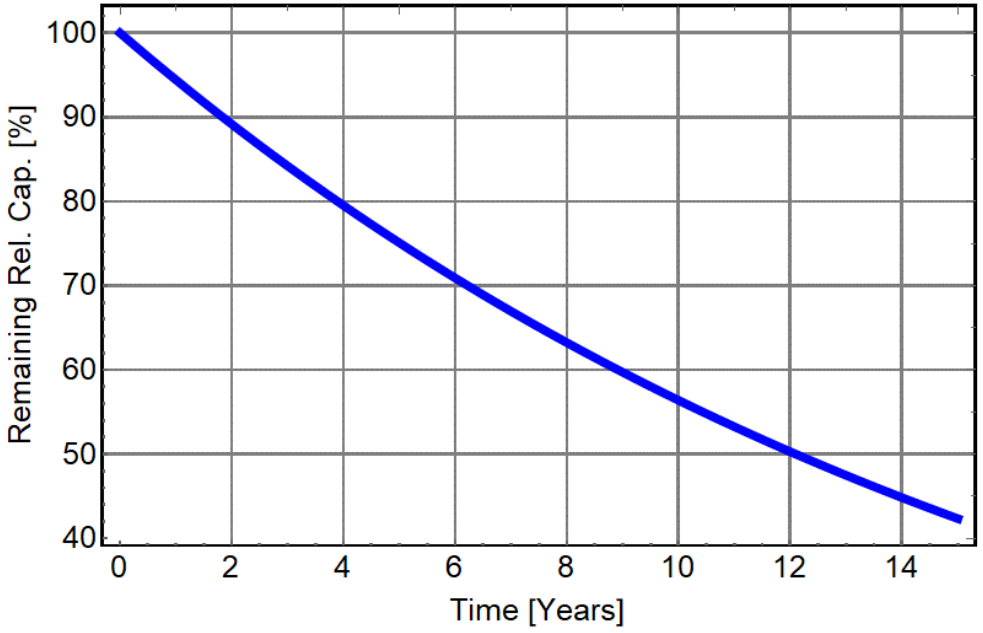

WÜRTH ELEKTRONIK
MORE THAN YOU EXPECT
Power Electronics & Energy Storage event
POWER ELECTRONICS 2022
ENERGY STORAGE EVENT 2022
14 juni 2022 | 1931 Congrescentrum 's-Hertogenbosch

Lifetime of Supercapacitor

- Same Mission Profile
- Different cell voltage with 2.3 V

Mission Profile			
Time [h]	Temp. [°C]	Voltage [V]	Model
10	40	2.3	DC Voltage Model
2	40	1.	DC Voltage Model
6	25	0	DC Voltage Model
6	25	0	DC Voltage Model

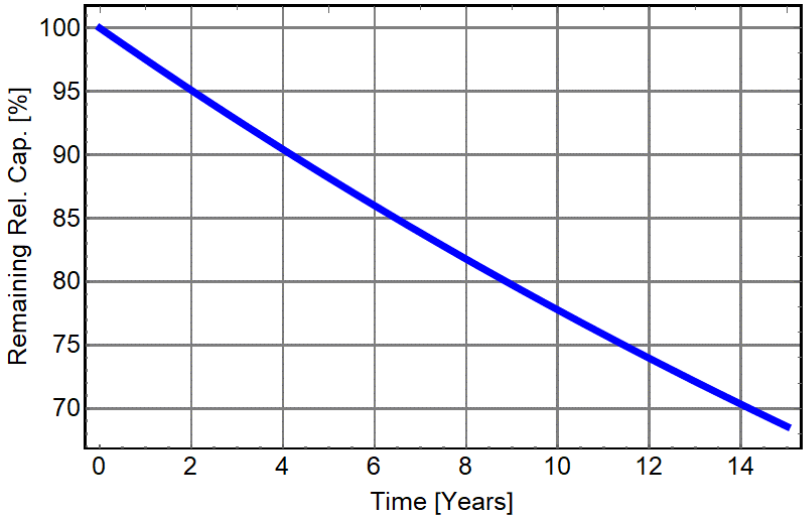

- Same Mission Profile
- Different temperature at the Supercapacitor with 65 °C

Mission Profile			
Time [h]	Temp. [°C]	Voltage [V]	Model
10	65	2.65	DC Voltage Model
2	65	1.	DC Voltage Model
6	25	0	DC Voltage Model
6	25	0	DC Voltage Model

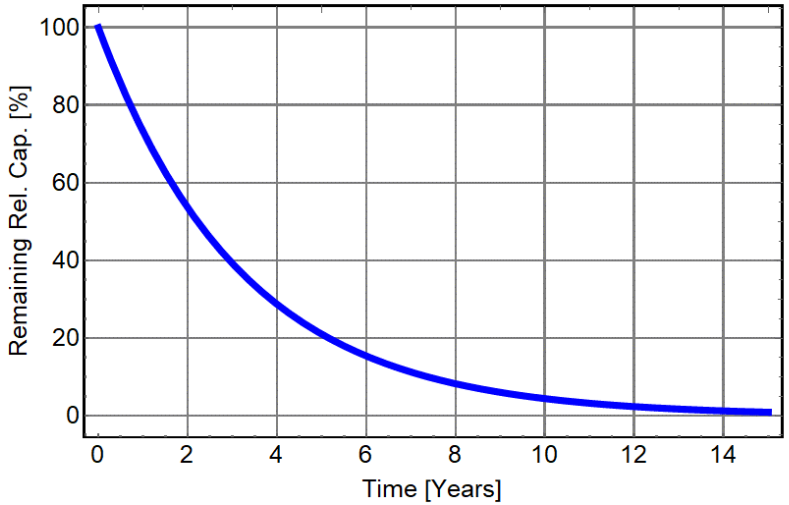

WÜRTH ELEKTRONIK
MORE THAN YOU EXPECT
Power Electronics & Energy Storage event
POWER ELECTRONICS 2022
ENERGY STORAGE EVENT 2022
14 juni 2022 | 1931 Congrescentrum 's-Hertogenbosch

Backup Solution

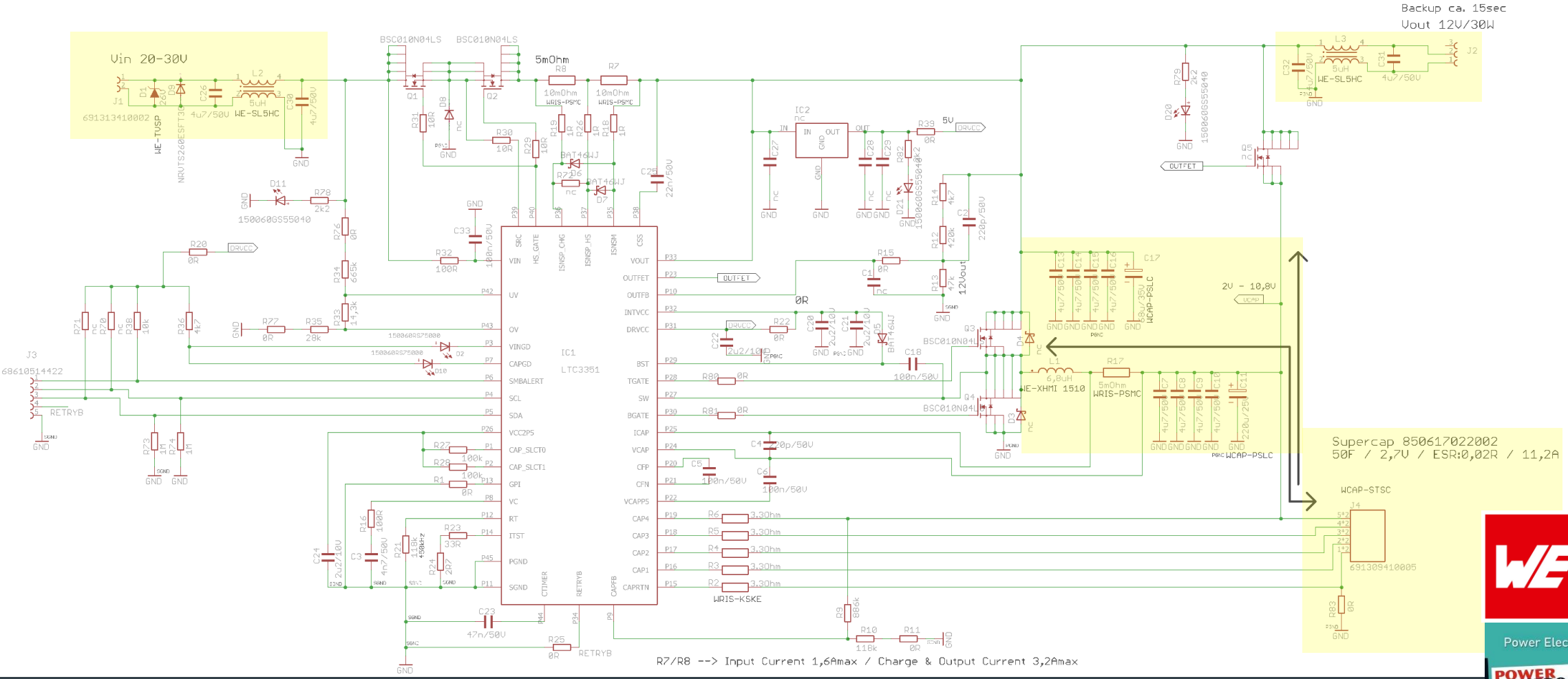

WÜRTH ELEKTRONIK
MORE THAN YOU EXPECT
Power Electronics & Energy Storage event
POWER ELECTRONICS 2022
ENERGY STORAGE EVENT 2022
14 juni 2022 | 1931 Congrescentrum 's-Hertogenbosch

Backup Solution

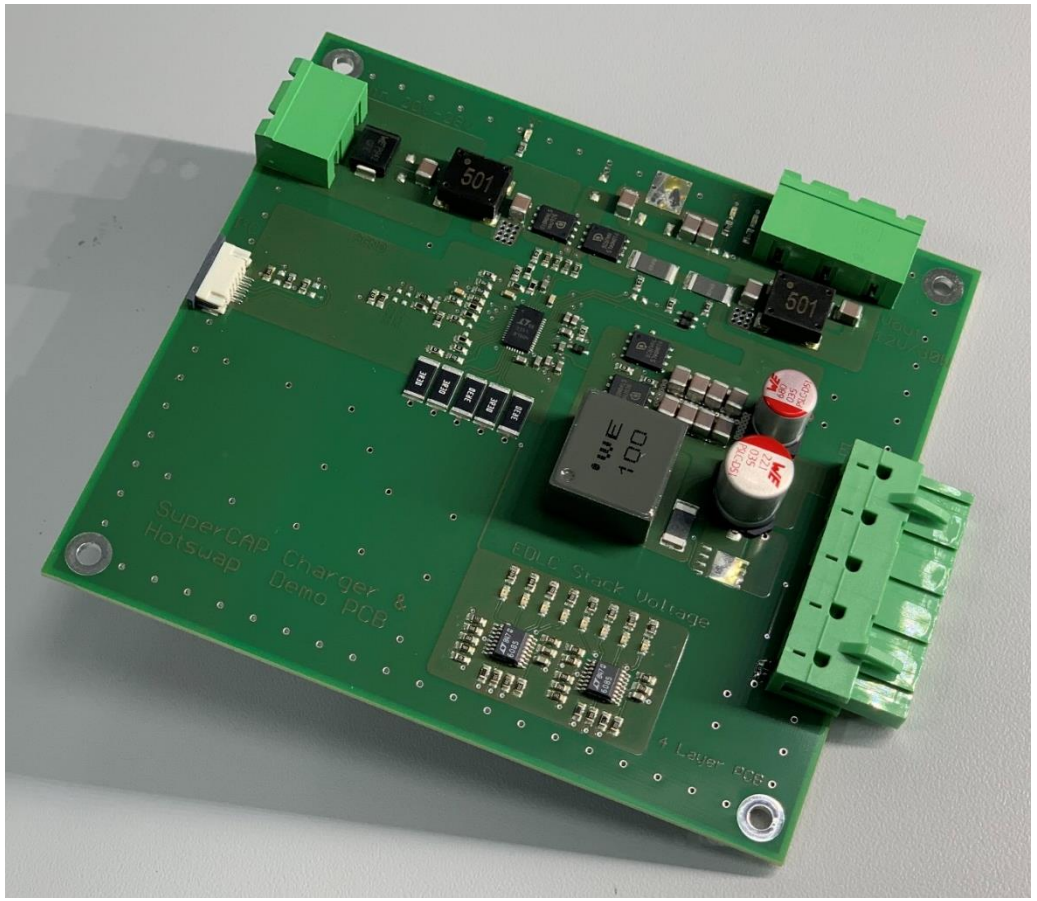

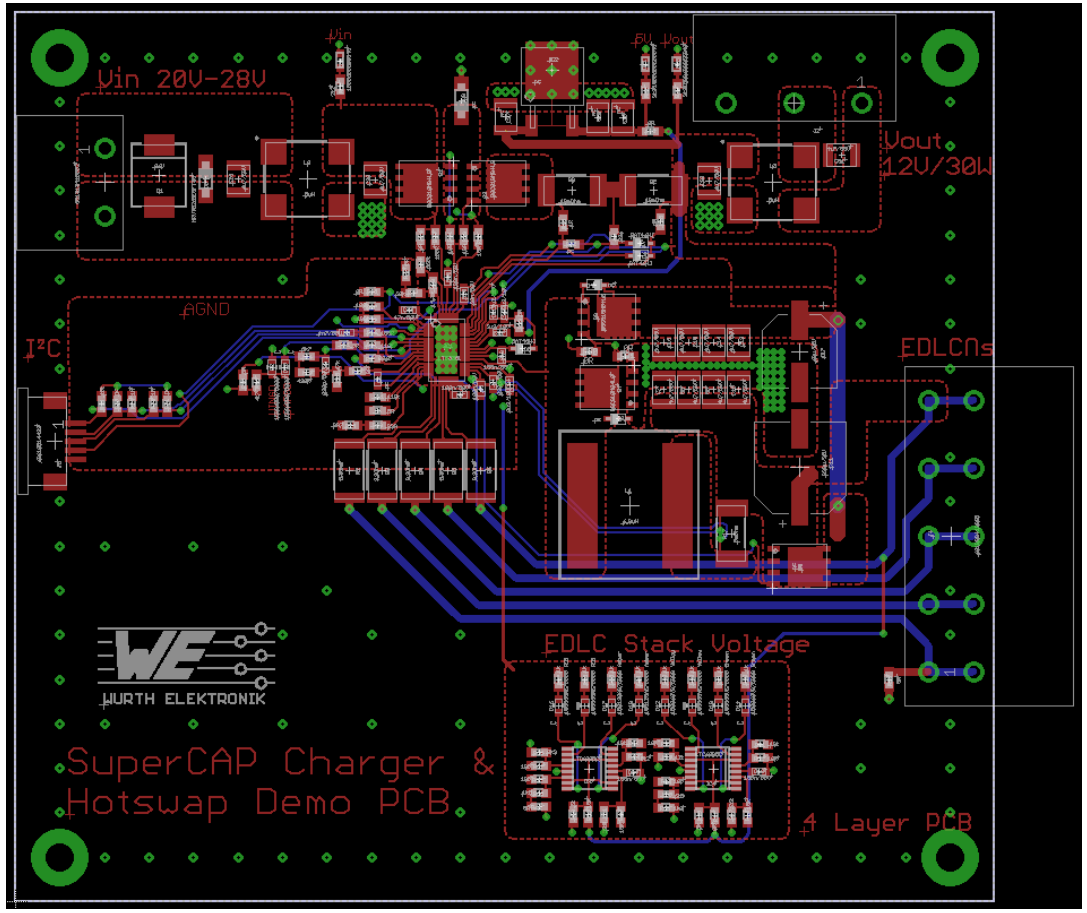

WÜRTH ELEKTRONIK
MORE THAN YOU EXPECT

Power Electronics & Energy Storage event
POWER ELECTRONICS 2022
ENERGY STORAGE EVENT 2022
14 juni 2022 | 1931 Congrescentrum 's-Hertogenbosch

Backup Solution Real World

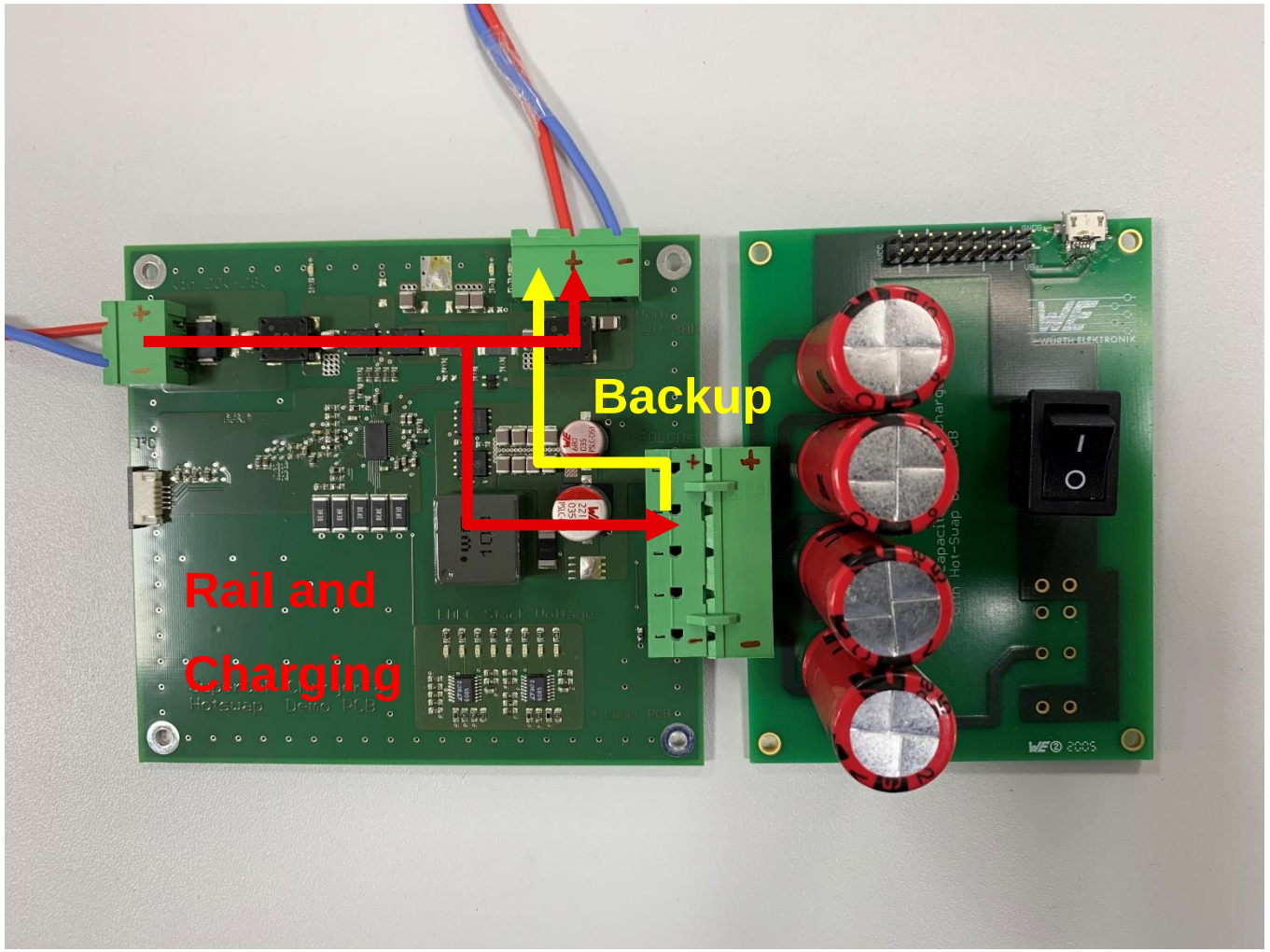

WÜRTH ELEKTRONIK
MORE THAN YOU EXPECT
Power Electronics & Energy Storage event
POWER ELECTRONICS 2022
ENERGY STORAGE EVENT 2022
14 juni 2022 | 1931 Congrescentrum 's-Hertogenbosch

Performance Charging

With load

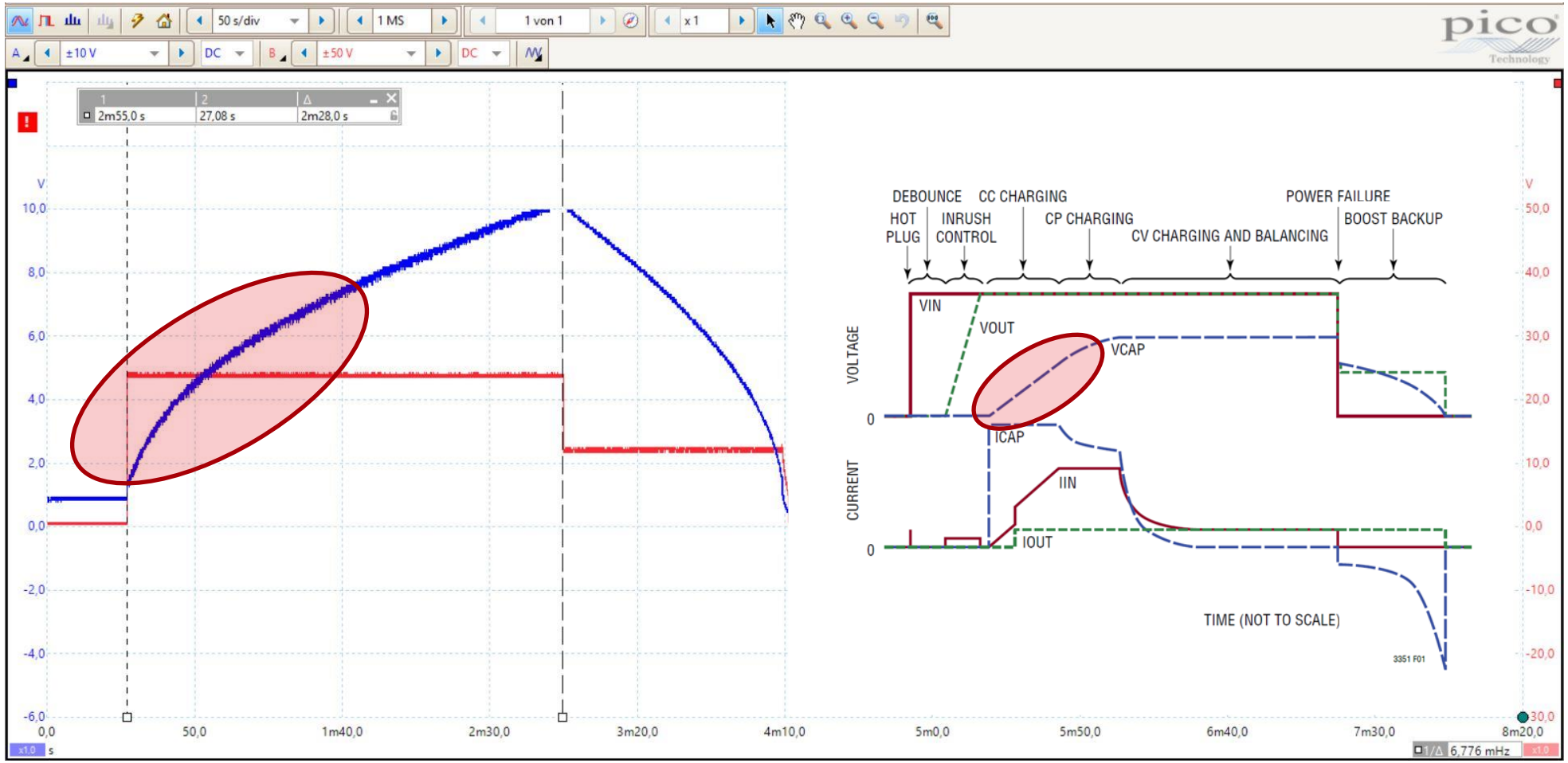

WÜRTH ELEKTRONIK
MORE THAN YOU EXPECT
Power Electronics & Energy Storage event
POWER ELECTRONICS 2022
ENERGY STORAGE EVENT 2022
14 juni 2022 | 1931 Congrescentrum 's-Hertogenbosch

Performance Charging

Without load

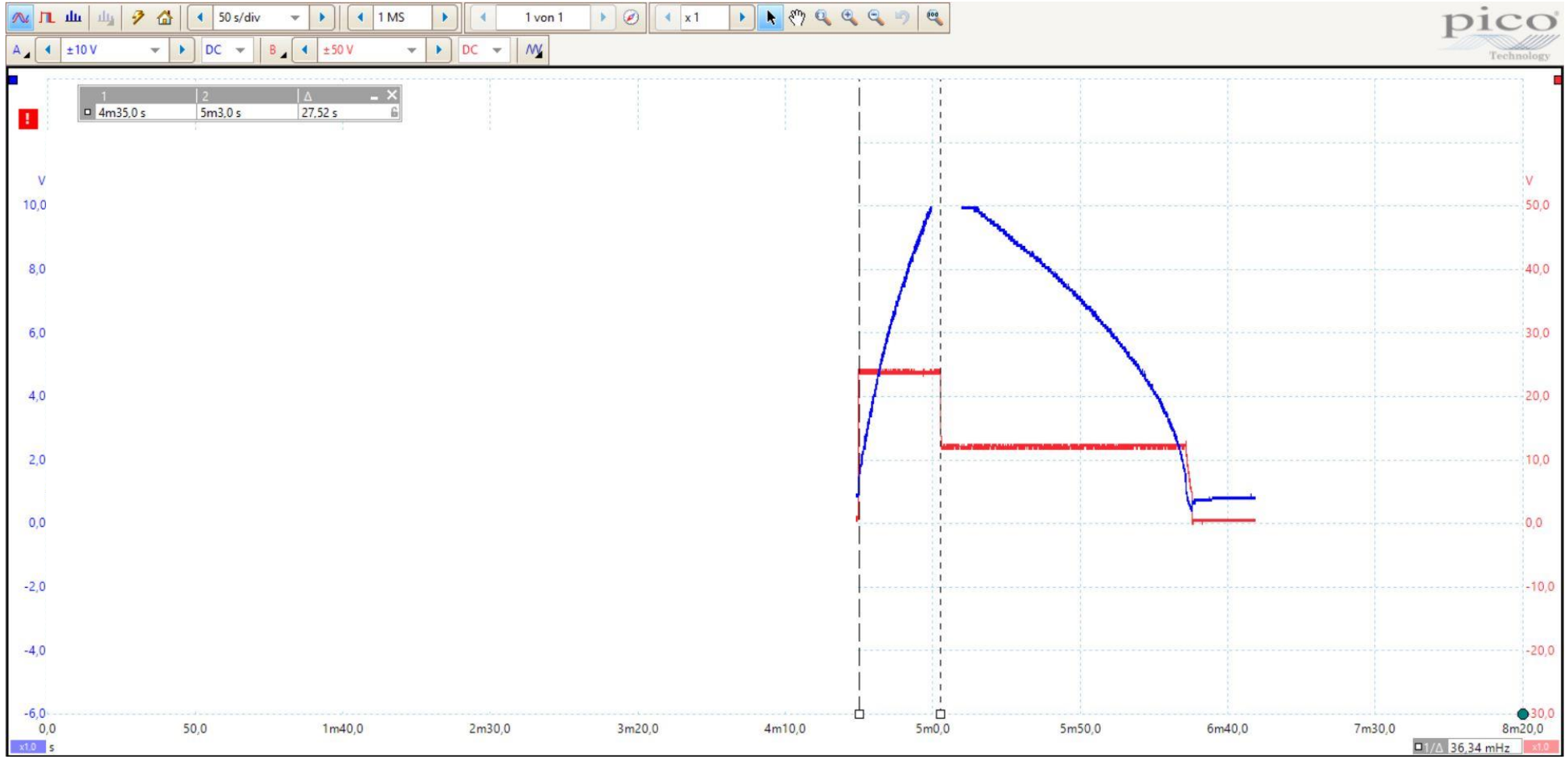

WÜRTH ELEKTRONIK
MORE THAN YOU EXPECT
Power Electronics & Energy Storage event
POWER ELECTRONICS 2022
ENERGY STORAGE EVENT 2022
14 juni 2022 | 1931 Congrescentrum 's-Hertogenbosch

Performance Charging / Discharging

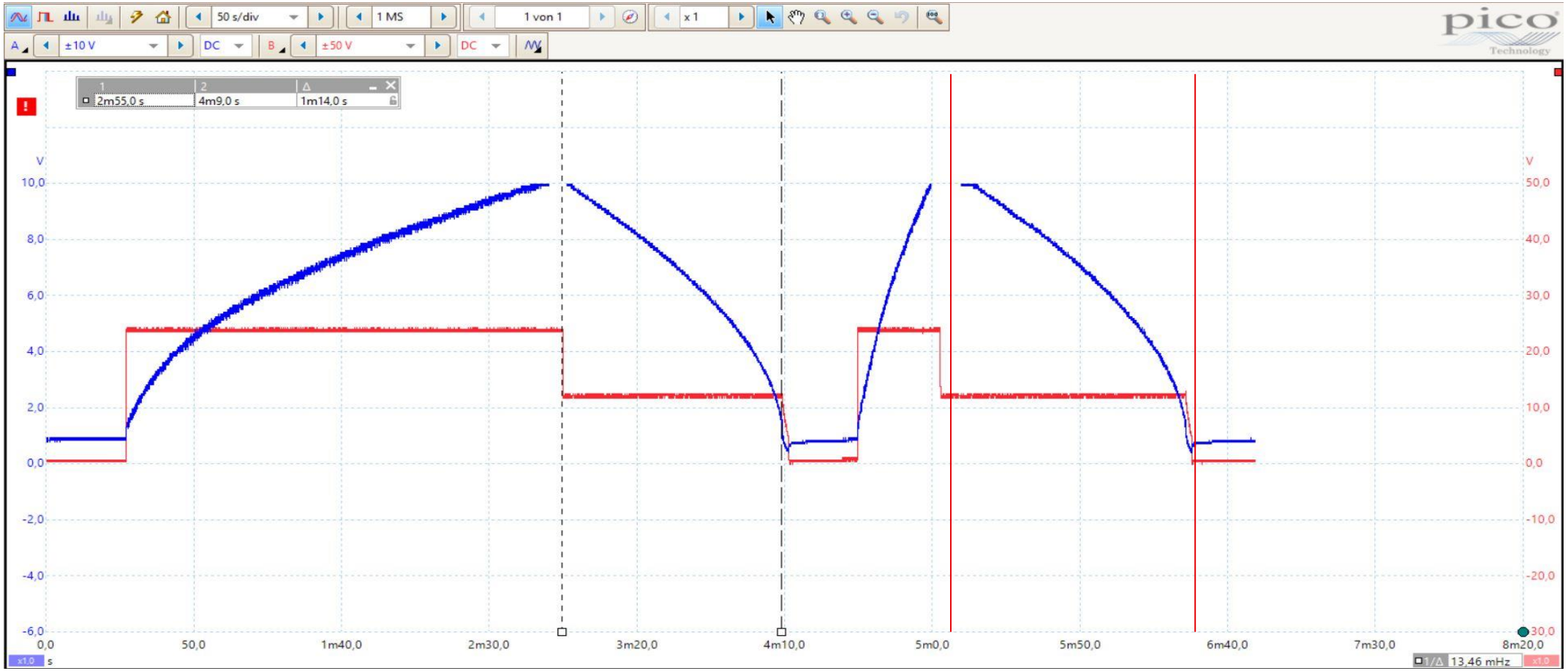

WÜRTH ELEKTRONIK
MORE THAN YOU EXPECT
Power Electronics & Energy Storage event
POWER ELECTRONICS 2022
ENERGY STORAGE EVENT 2022
14 juni 2022 | 1931 Congrescentrum 's-Hertogenbosch

Design and Application Review

Summary

- Backup Solution with a size of 10 cm x 18.5 cm
  - 3.94 inch x 7.3 inch

- Vin 24V and Backup voltage 12 V
- Output Power 30 W => 12 V @ 2.5 A

- Eval-Board and Software for LTC3351 available

- Support Note for Design-In Process
- Application Note for the whole Process
- Currently working on a Supercapacitor Bank Calculation Tool

- WE support you in your Design

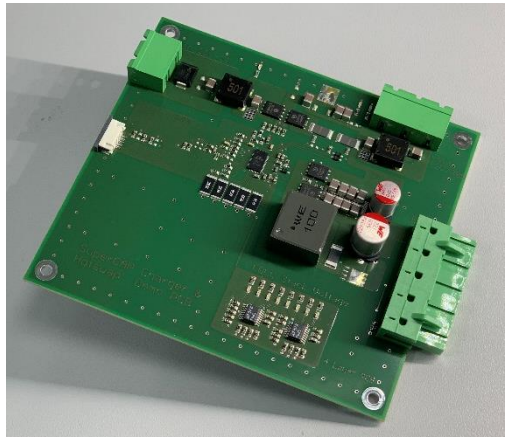

WÜRTH ELEKTRONIK MORE THAN YOU EXPECT
Power Electronics & Energy Storage event
POWER ELECTRONICS 2022
ENERGY STORAGE EVENT 2022
14 juni 2022 | 1931 Congrescentrum 's-Hertogenbosch

Thanks for your attention!

- Würth Elektronik Nederland - België
- Raf Vleugels – FAE – raf.vleugels@we-online.com
- Alex Snijder – FAE – alex.snijder@we-online.com