Earthing of ship's AC distribution system

Cees Meijer
Consultant
Conceptual design & Consultancy
Imtech Marine
version 0.2

Content

Imtech Marine Today

Supplier independent system integrator & service provider in the maritime industry

- Deep heritage dating back to 1860
- Annual revenue of 415 million Euro
- Global network covering 30 countries and more than 100 locations
- Wide spread customer base
- >40% recurring business
- 2400 employees




Imtech Marine is built upon strong companies







1860	1872	1899	1915	1916	1963	1980	1996
Van Rietschoten & Houwens, later known as Imtech Marine & Offshore	Royal Dirkzwager	HDW Hagenuk Schiffstechnik, later known as Imtech Marine Germany	Rudolf Otto Meyer starts a maritime department later known as Schiffbau-/ Dockbautechnik	Radio Holland	Van Berge Henegouwen Installaties	Elkon	Techsol Marine
R&H: Electrical & mechanical engineering IM&O: Whole ship solutions for Offshore, Naval and Yachts. New build and refit	The maritime information & service provider for North-West Europe	New build, refits and service for Cargo Ships, Work Boats and Yachts	HVAC for all types of ships, e.g. Cruise Liners and Naval Vessels. New build and refit	Sales and Service of Navigation, Communication and IT equipment	AV Entertainment and IT systems for Super Yachts	New Build and refits for Cargo Ships, Tugs, Naval Vessels and Yachts	Automation, alarm & monitoring, power management, propulsion control & electrical systems
Internatio Muller (later known as Imtech) acquired R&H in 1967	54% part of Imtech	Part of Imtech since 2004	Part of Imtech since 1997	Part of Imtech since 2006	Part of Imtech since 2008	Part of Imtech since 2010	Part of Imtech since 2011

Tess, Venteville and Van Stappen & Cada are also part of Imtech Marine today.

Wide range of customer markets


Workboats


Cruise & Ferry


Cargo


Naval


Offshore platforms


Special vessels


Yachts


Inland

Fishery

Whole ship solutions = Systems + Capabilities + Service & Maintenance

PORT SERVICES

CONNECTIVITY

NAVIGATION

INFORMATION TECHNOLOGY

HEATING VENTILATION & AIR CONDITIONING

WATER MANAGEMENT SYSTEMS

ENTERTAINMENT

SPECIALTIES

PROPULSION

POWER GENERATION & DISTRIBUTION

SHIP MOTION CONTROL (AUTOPILOTS)

ENGINE ROOM AUTOMATION

Portfolio Offshore Platform

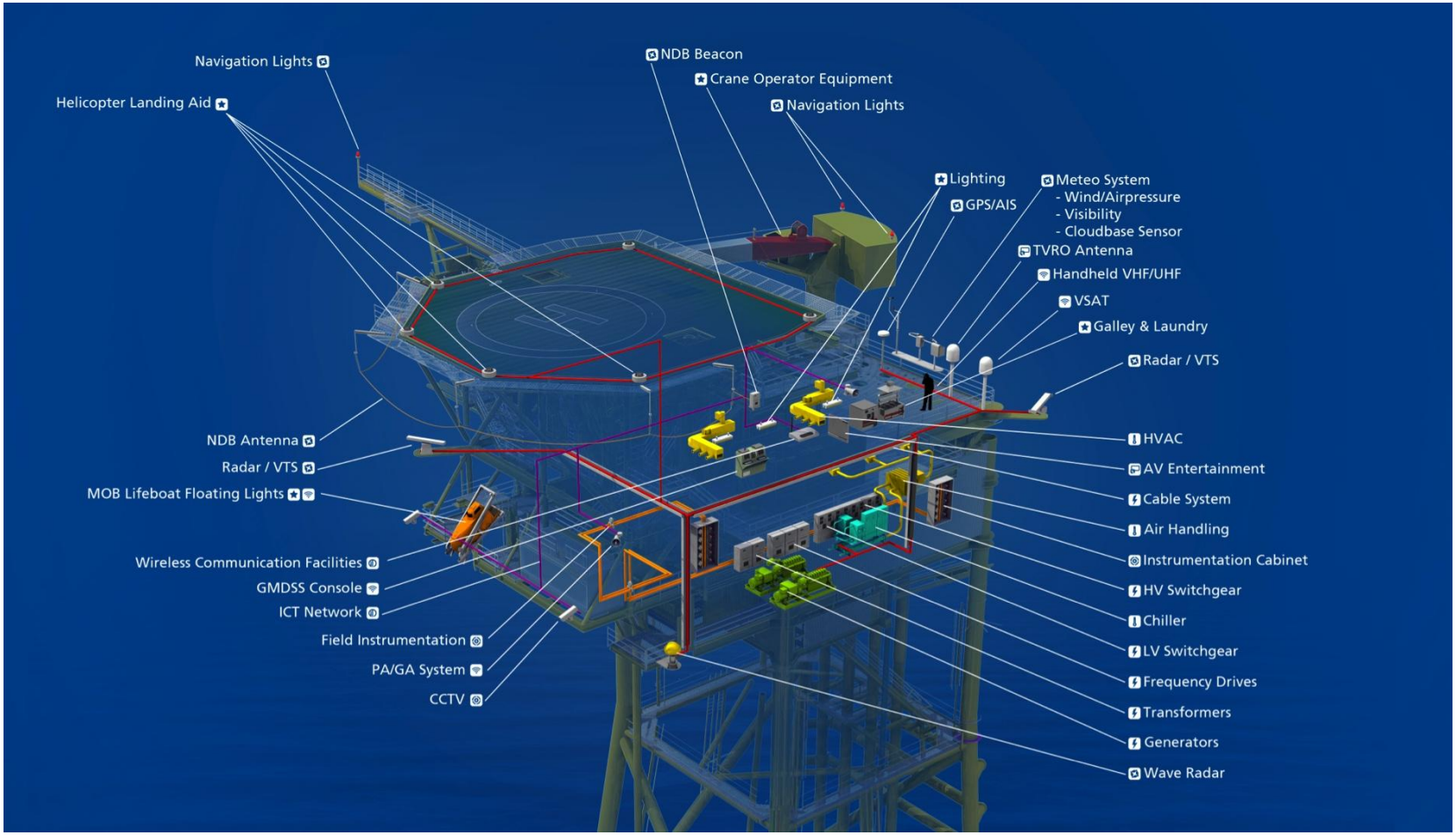

Portfolio Yachts

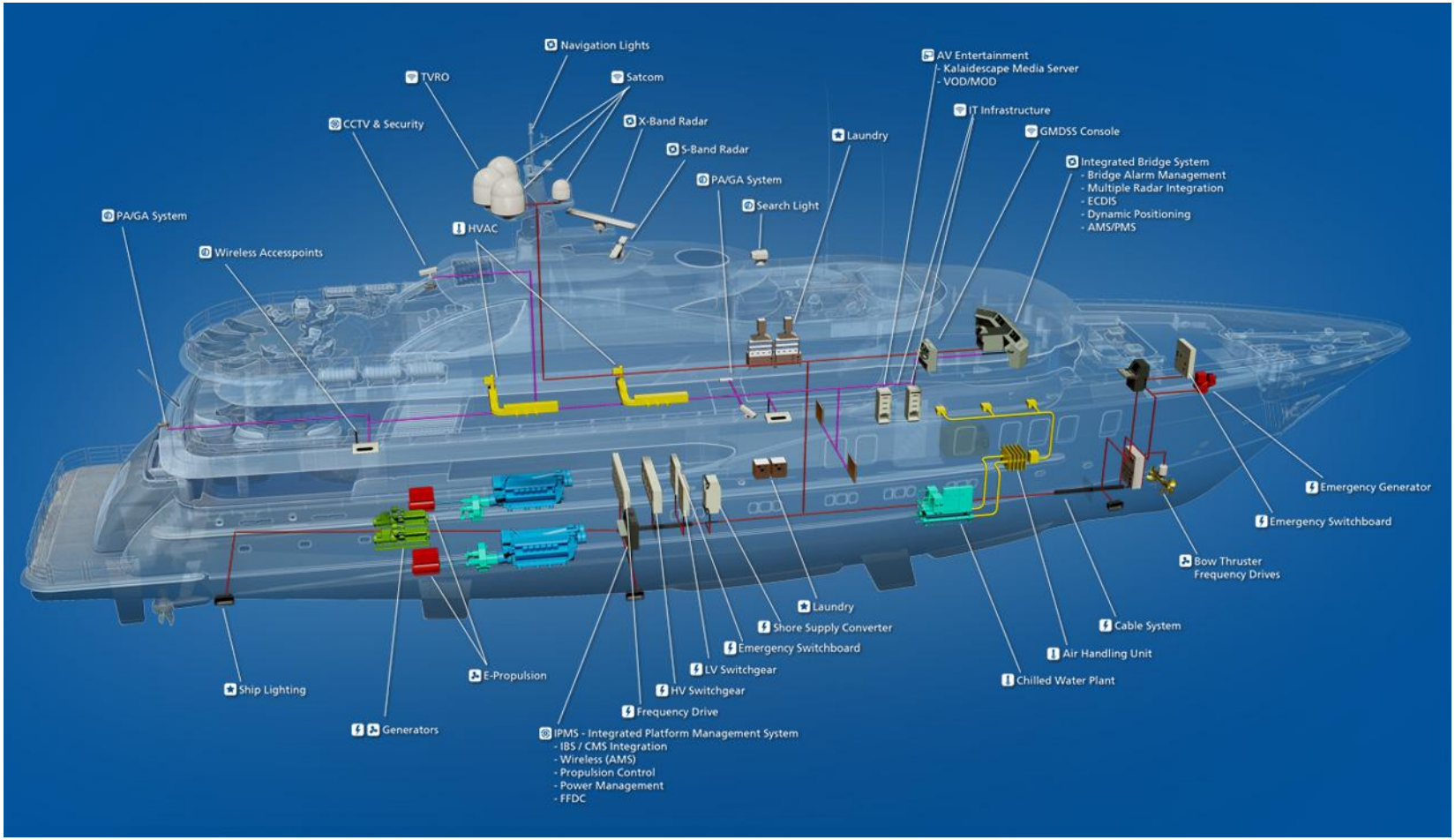

Portfolio Naval Ships

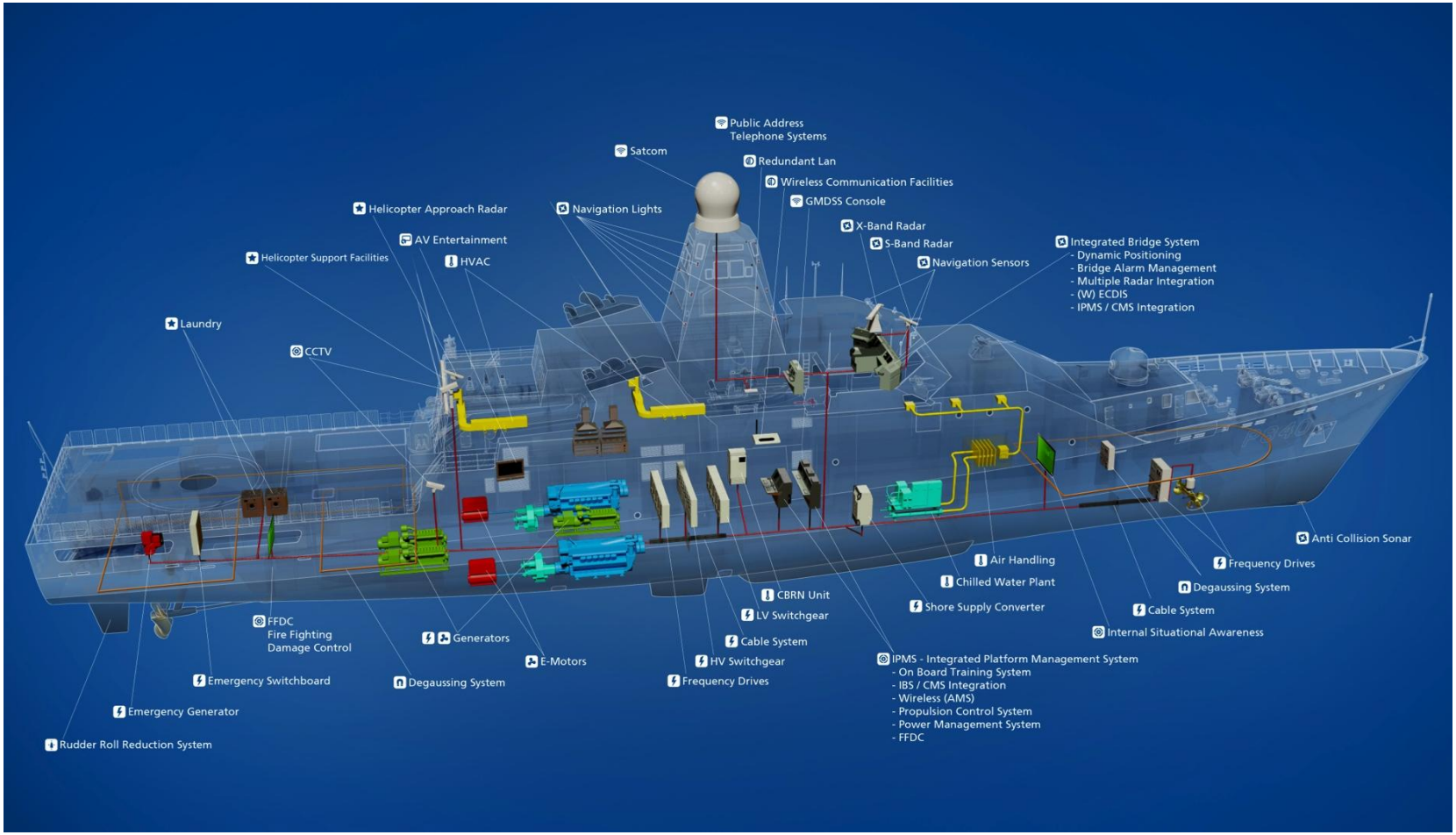

Portfolio Workboats/Special Vessels

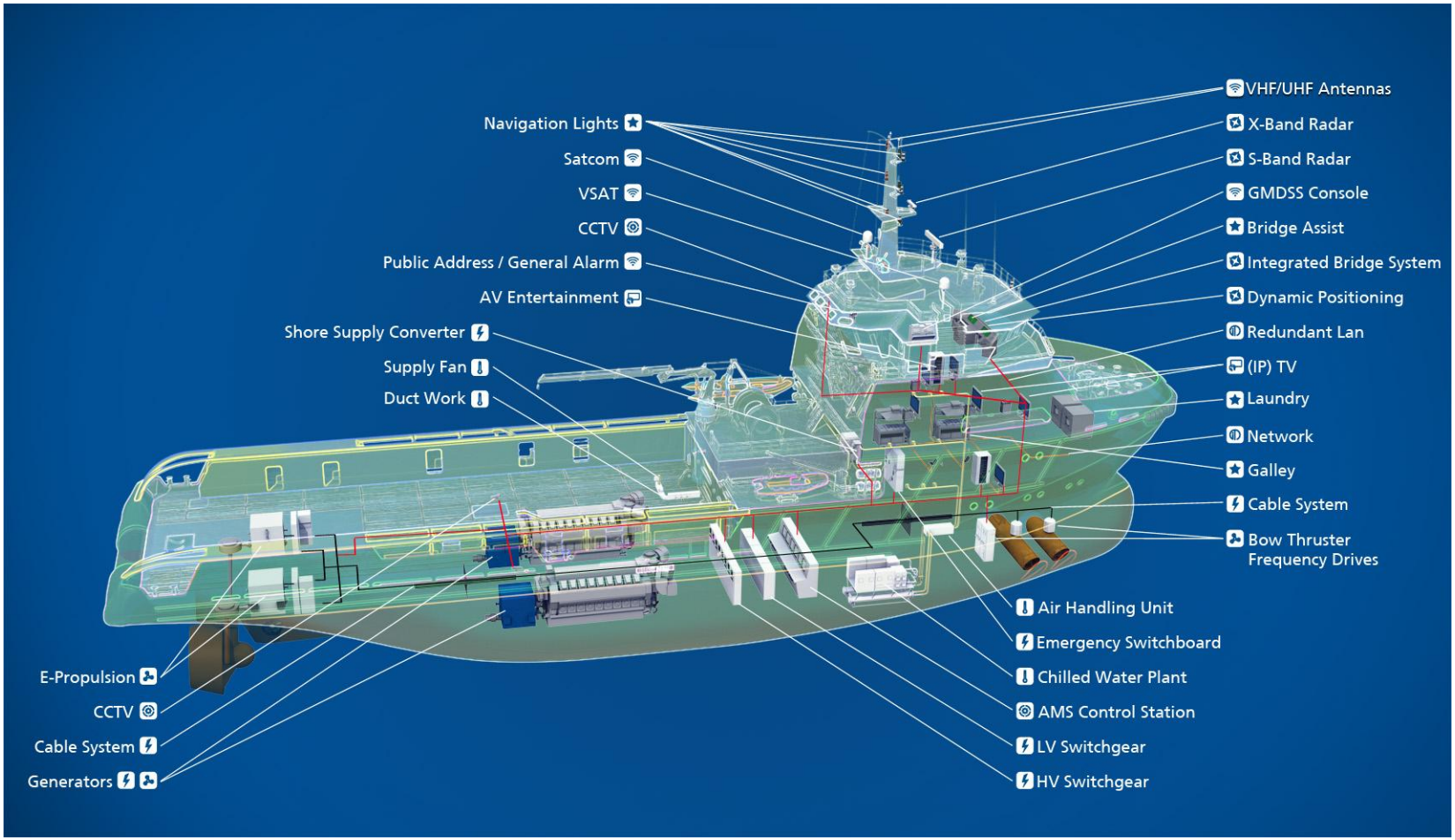

Imtech Marine maintenance and services

Global Coverage

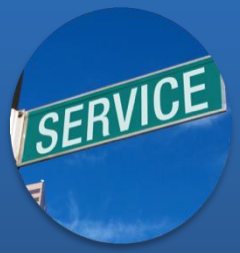

Innovation in service concepts

Technology and brand independent

Global service network: Wherever you sail, we are always near

- 30 Countries
- More than 100 locations
- Over 400 own field engineers

Maintenance & service facts

Key numbers

■ More than **50,000** calls yearly ■ **10,000** vessels of returning customers ■ **5,000** ships under contract

Business volume

Service is more than **1/3** of our business volume

Remote monitoring & maintenance

Global Technical Assistance Centres in Singapore, Rotterdam and Houston, supported by a Global Service System

Content

Earthing of a ship's ac distribution system

"Earthing" is a connection between an electrical power grid and earth which has been made deliberately.

On board a metallic ship "Earth" is the hull and superstructure and as a consequence it is everywhere, and on top of that: it is highly conductive.

Even if no earting connection has been made, the grid is connected to earth through (parasitic) capacitances and inductive couplings.

Earthing

- Earthing of (non-active) exposed conductive parts (Bonding)
  - Enclosures
  - (Cable) screens
- Earthing of (Neutral of) supply grid
  - Non-earthed (IT system)
  - Directly earthed (TT / TN-S / ~~TN-C~~ / ~~TN-S/C~~ system)
  - Impedance earthed (??? System)
    - High resistance earthed
    - Low resistance earthed
    - Reactance earthed

Content

Non-earthed system

On ships (except yachts) mostly:

- Non-earthed system (IT system)
  - Neutral not earthed
  - Earthing of exposed conductive parts locally

  Usually:
  - Neutral not accessible
  - Three-phase, 3-wire
  - Lighting separated from Power
  - Lighting across L-L

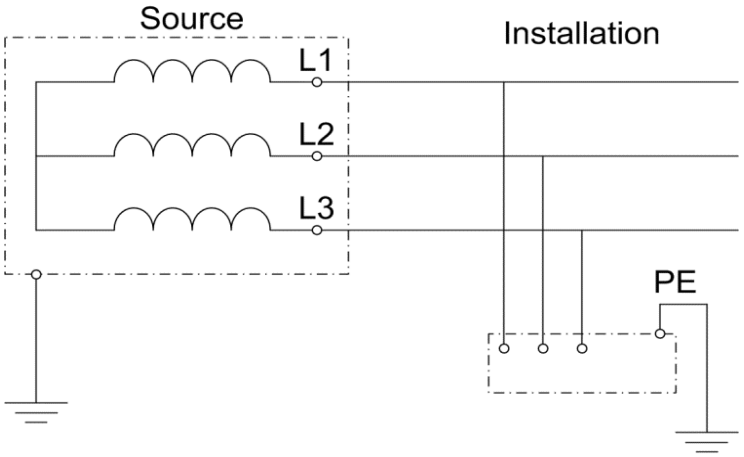

Directly earthed system

On land and on yachts mostly:

- Directly earthed system (TN-S system*)
  - Neutral earthed
  - Earthing of exposed conductive parts at the source

  Usually:
  - Neutral accessible
  - Three-phase, 5-wire
  - Lighting not separated from Power
  - Lighting across L-N

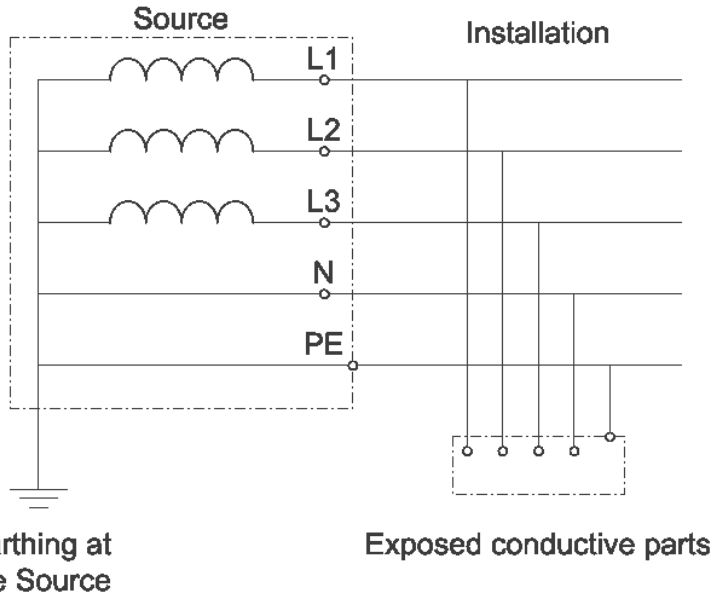

*TN-C system and TN-CS system not considered

Directly earthed system

Or:

- Directly earthed system (TT system)
  - Neutral earthed
  - Earthing of exposed conductive parts locally

  Usually:
  - Neutral accessible
  - Three-phase, 4-wire
  - Lighting not separated from Power
  - Lighting across L-N

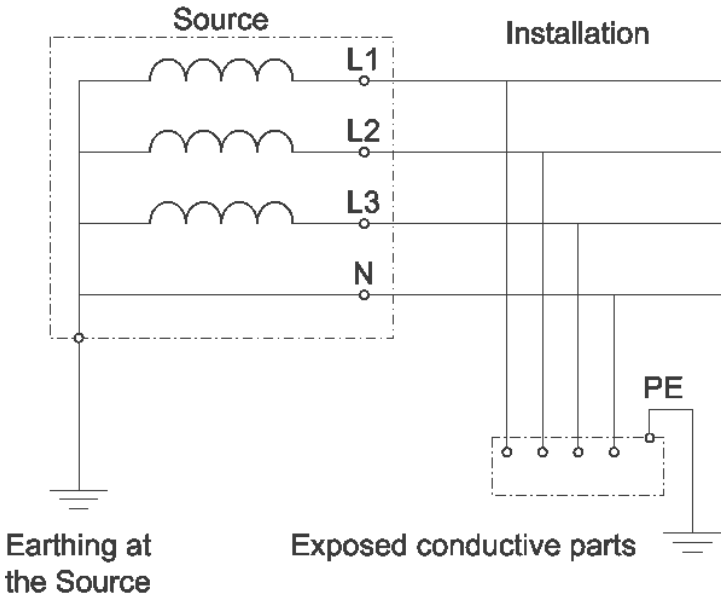

Content

Aspects to be considered with respect to Earthing

- Safety
  - Protection against electric shock
  - Protection against excessive earth leakage currents
  - Short circuit forces
  - Arc flash
- Maintainability
  - Ability of continued operation under earth fault condition
  - Ease of locating earth faults
- Harmonic distortion and Electromagnetic interference

Electric shock

Danger of electric shock is current, not voltage

- Beyond 10 mA: Risk of muscle cramping (unable to let-go)
- Beyond 16 mA: Breathing difficulty
- Beyond 30 mA: Potentially lethal due to risk of heart fibrillation

- In non-earthed systems RCDs not reliable

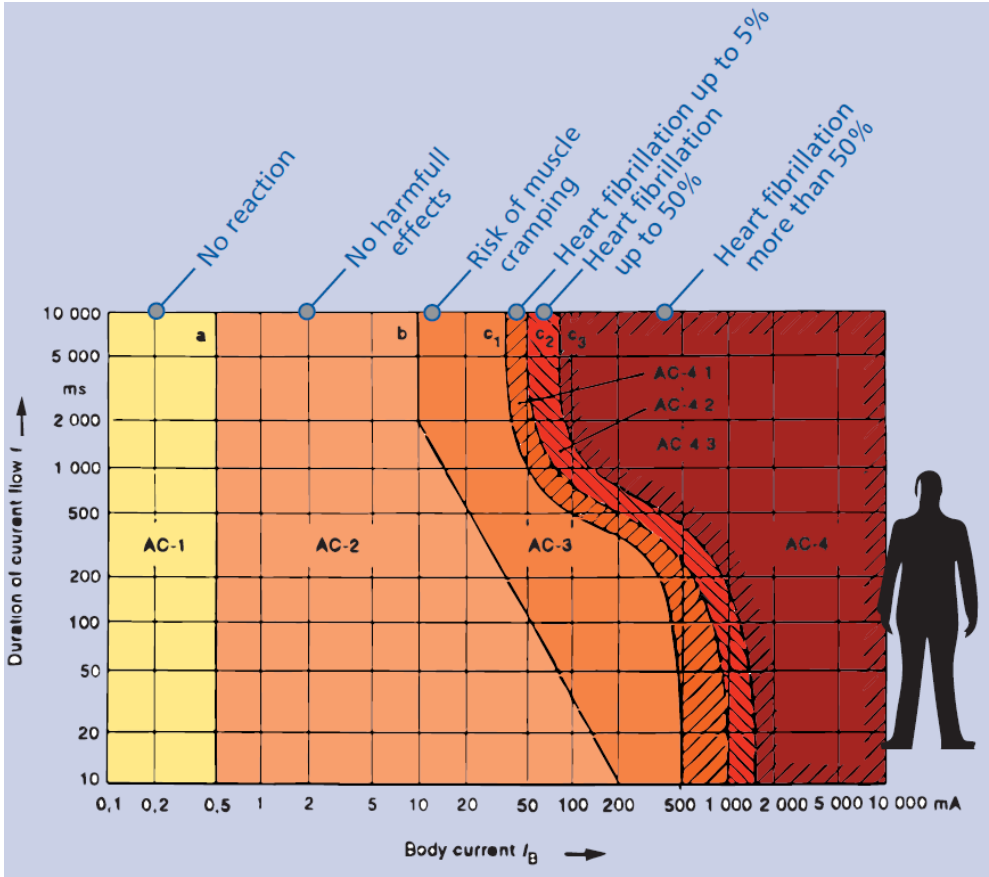

Source: IEC 60479-1 Technical Report - Effects of current on human beings and livestock

Safety

- Fire
  - Protection against excessive earth leakage currents
    - Excessive earth leakage currents can cause fire
      In adverse conditions (flammable materials)
    - Max. allowed by Classification Societies: 5 A
- Short circuit
  - Short circuit forces
    - In a directly-earthed grid Phase-to-Earth short circuit currents can be up to 50% greater than 3-phase symmetrical short circuits
      IEC 61363 (= ruling standard for short-circuit calculations for ships) does not take that into account
- Arc flash

Common mode disturbance

- Common mode filters
- Common mode loops change due to earthing

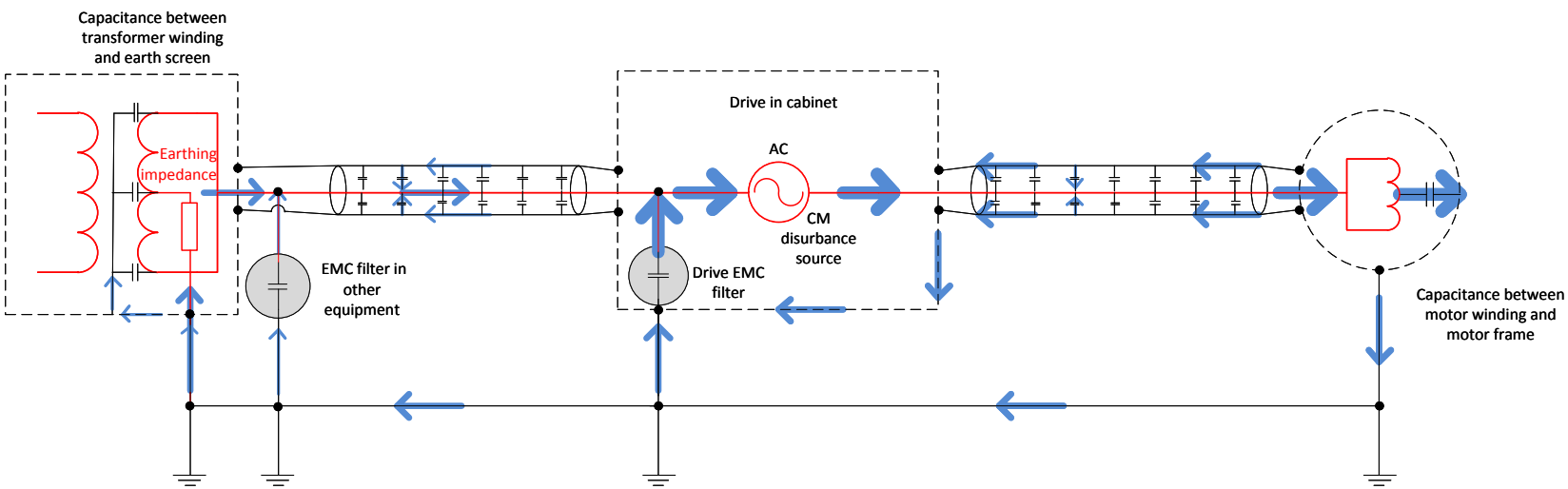

Content

Non-earthed grid

- Earth fault in non-earthed grid (IT-system)
  - Phasor diagram
  - Earth fault current
    - Determined by capacitances. Large AFE drives: 2.5 A per drive or even higher.
    - Earth fault is detected, but not located. No switch-off.

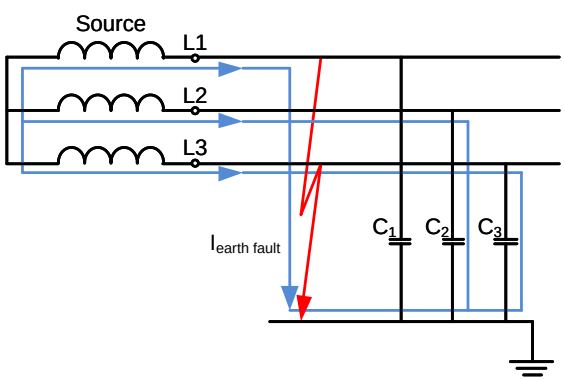

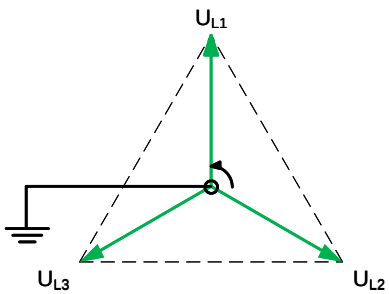

Normal operation

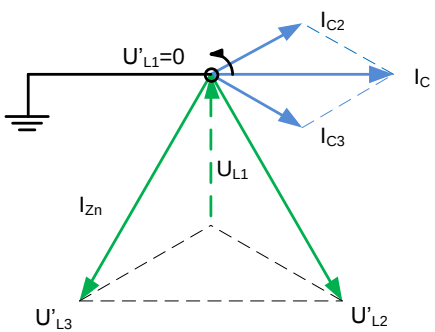

Earth fault

Non-earthed grid

- Earth fault in non-earthed grid (IT-system)
  - Filter capacitors overloaded
  - Over voltage protection overloaded
  - Risk of fire due to large currents (20+ A) flowing in earth fault spot.

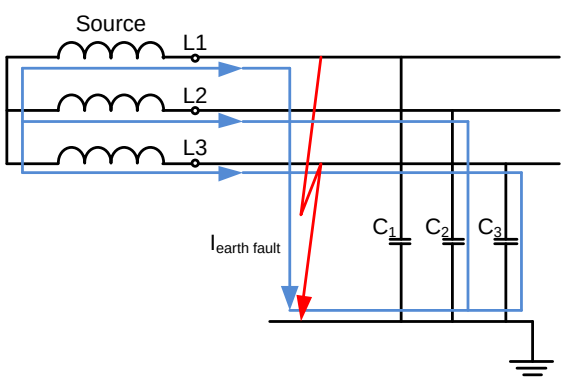

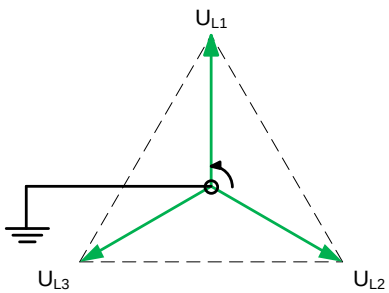

Normal operation

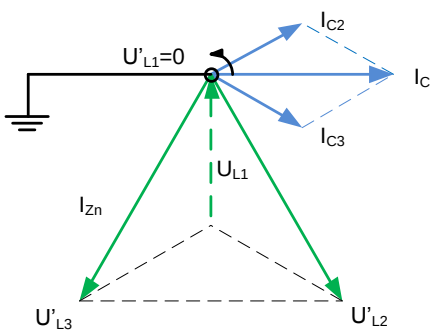

Earth fault

Common mode (Drive) filters

- Typical EMI filter in non-earthed grid (IT-system)

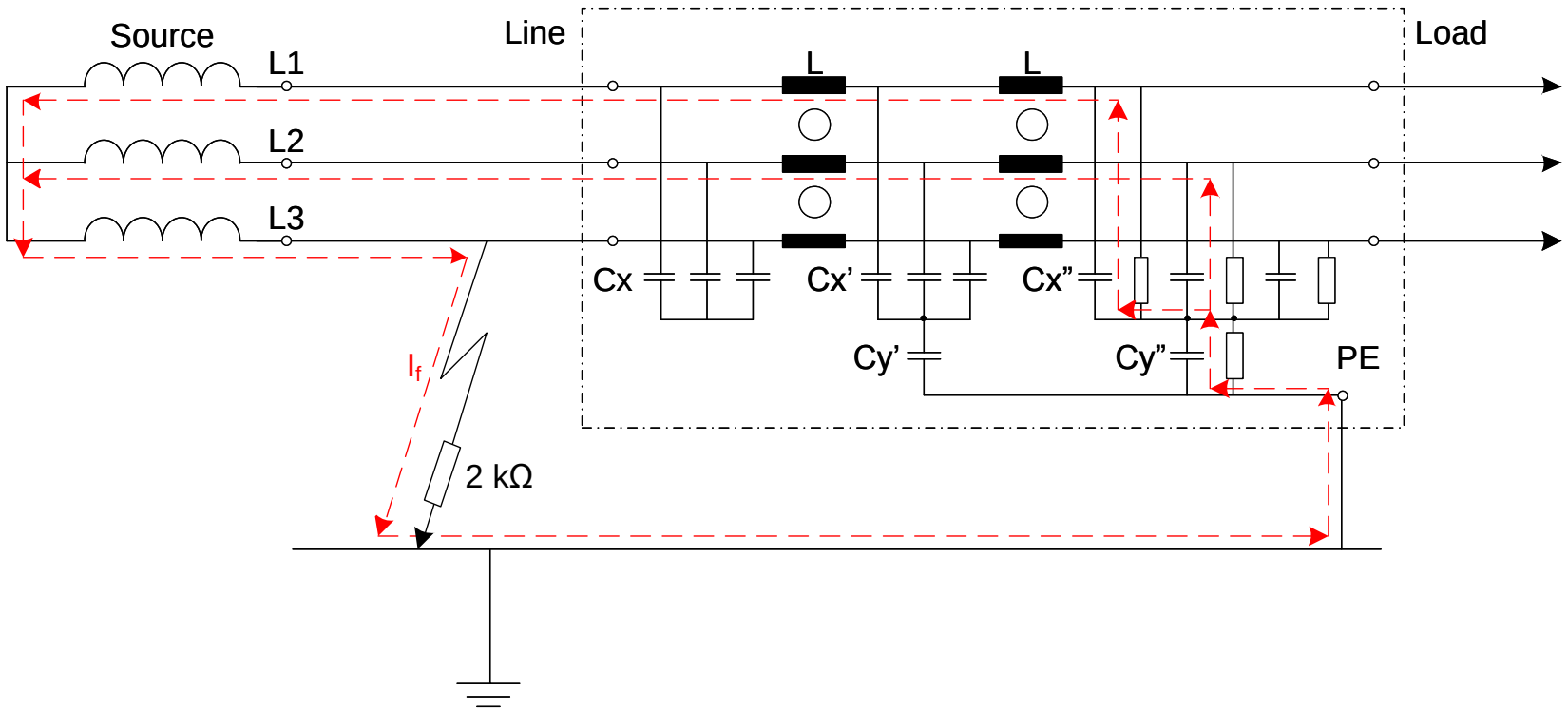

Electric shock

- In non-earthed grid an EMI filter is a considerable risk for electric shock
  - RCDs are unreliable in non-earthed grids and are therefore not used
  - Capacitance toward earth has increased enormously since 1950's

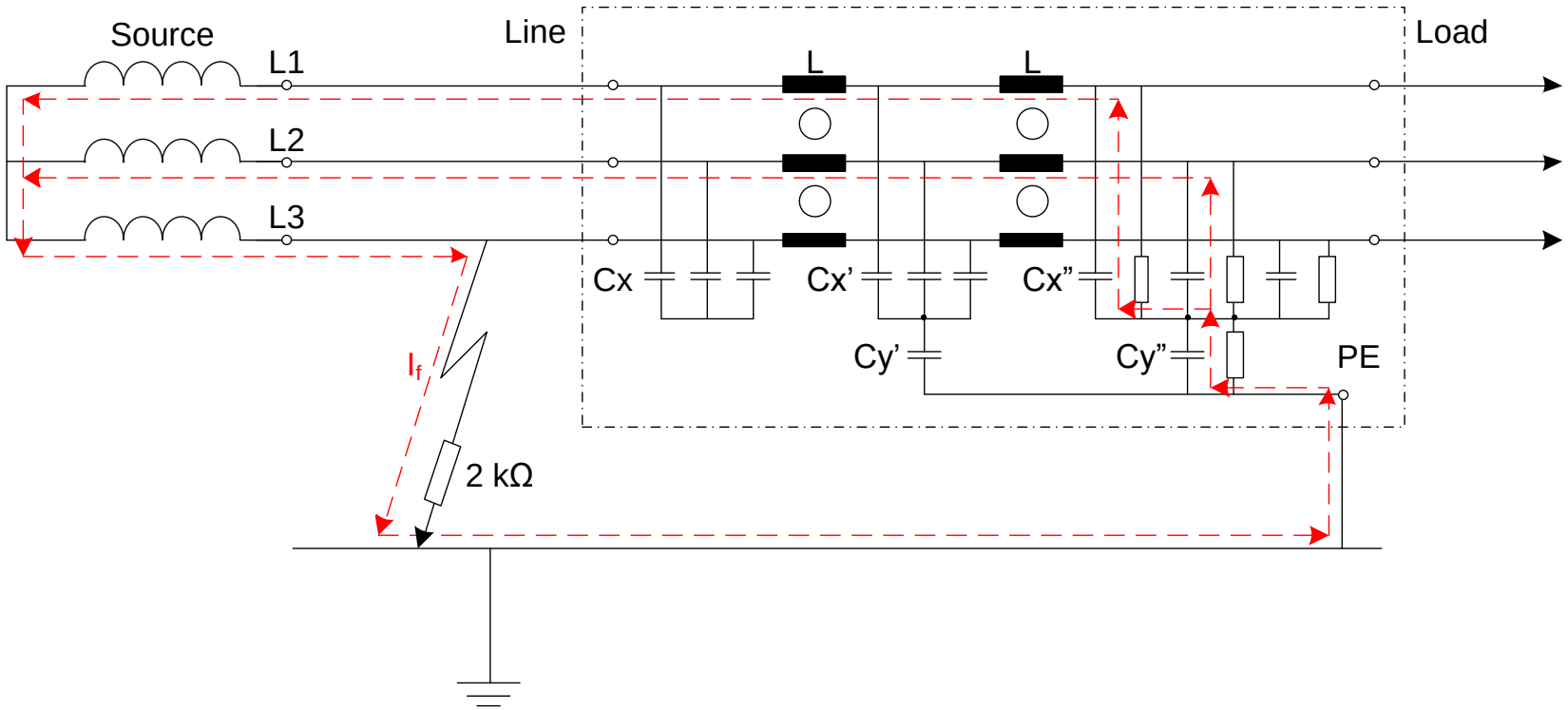

Non-earthed grid

- Advantages
  - Reduced risk of (phase-to-earth) arc flash on 1st fault
  - Ability to sustain service under single fault conditions for a limited time, provided earth-capacitances are limited (< 1 µF at 440 V)

- Disadvantages
  - L-N consumers cannot be connected
  - Protection against electric shock with RCDs unreliable
  - Filters and over voltage protections subject to increased voltage under earth fault conditions
  - Fault finding difficult (1st failure) to nearly impossible (2nd failure in same phase)
  - Enhanced risk of arc flash on 2nd earth fault

Directly earthed grid

- Earth fault in directly-earthed grid (TN-S-system)
  - Phasor diagram
  - Earth fault current
    - Determined by source impedance. Up to 50% higher than 3-phase symmetrical short-circuit. (100 kA or even more)
    - Earth fault is short-circuit. Immediate switch-off.

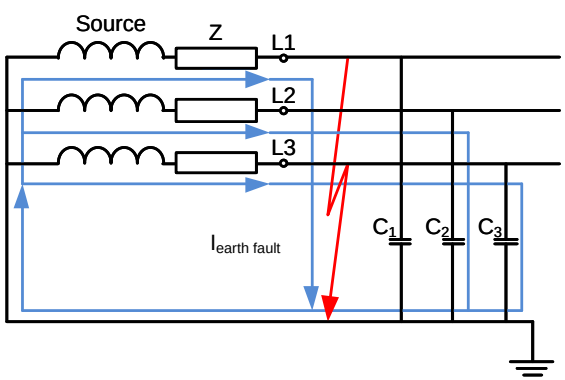

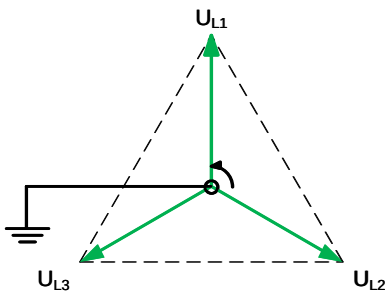

Normal operation

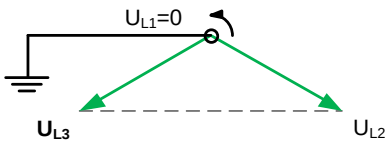

Earth fault

Directly earthed grid

- However:
  - Considerable earth currents have been measured in various installations, without an earth fault being apparent
  - Currents up to 4 A, 60 Hz. Occurrence in combination with frequency converter operation
- What is the cause of these currents?
  - EMI filters conducting unbalance currents?
  - Earthing connections inside equipment paralleling N and PE?
  - ???????

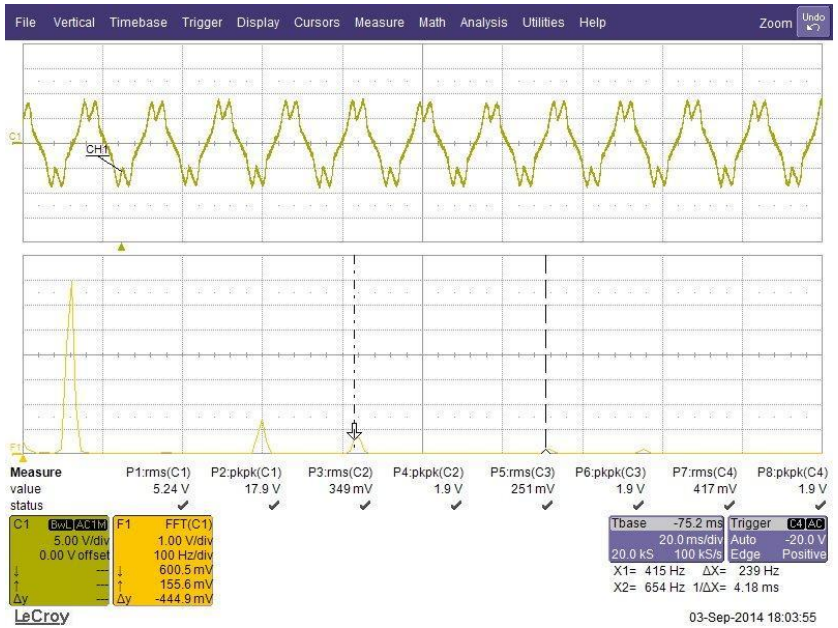

Directly earthed grid

- Advantages
  - Protection against electric shock with RCDs < 30 mA
  - L-N consumers can be connected
  - Earth fault finding is easy

- Disadvantages
  - Enhanced risk of arc flash (phase-to-earth fault)
  - Bigger short-circuit forces
  - Inability to sustain service under fault conditions
  - Earth fault inside generator can cause irreparable damage
  - Earth (fault?) currents the cause of which we don't know

Conclusion

- Non-earthed system
  - Undesirable due to poor protection against electric shock and difficulty to find earth faults
  - In fact: Non-existent due to many EMI filters connected to earth

- Earthed system
  - Even under healthy conditions suffering from earth currents the cause of which we don’t know (yet)

Which is the least undesirable system?

Content

Pioneering Spirit

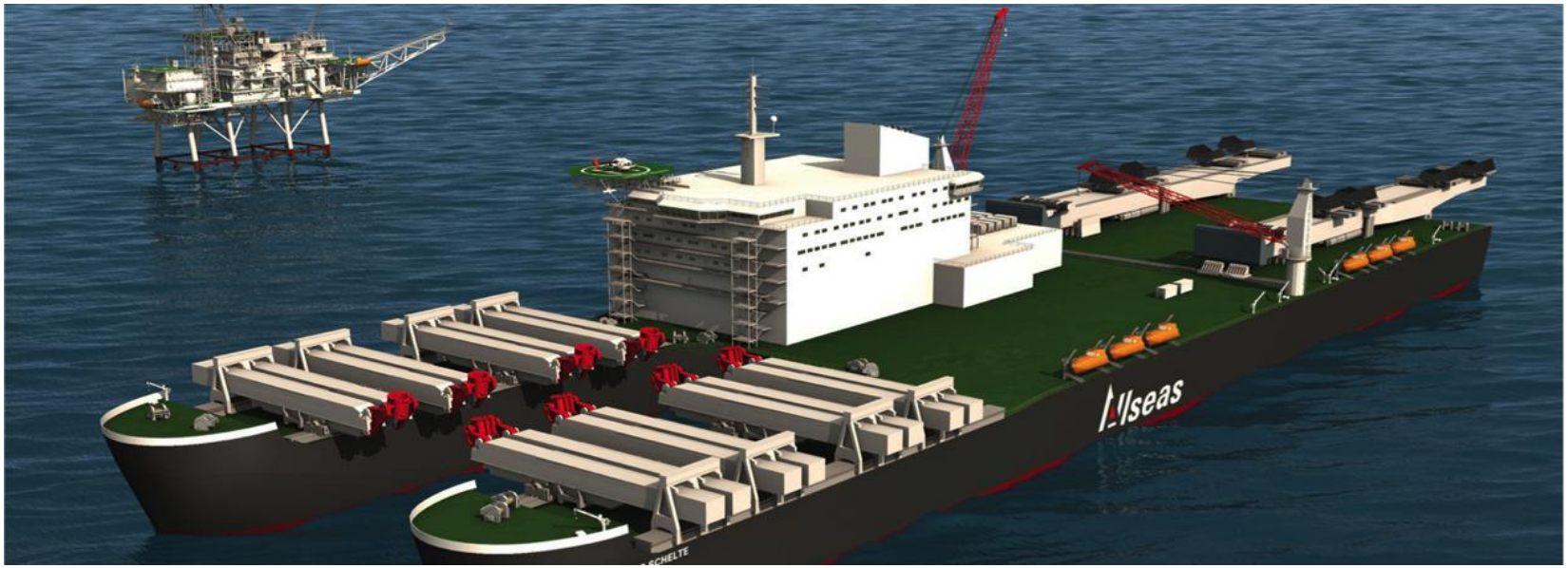

SYSTEMS

- ELECTRICAL PROPULSION
- POWER GENERATION & DISTRIBUTION
- DYNAMIC POSITIONING SYSTEMS
- PLATFORM AUTOMATION
- VESSEL MANAGEMENT SYSTEMS
- HEATING VENTILATION & AIR CONDITIONING

SERVICE

- ENGINEERING
- COMMISSIONING
- PROJECT MANAGEMENT

Seven Borealis

SYSTEMS

- NAVIGATION
- DYNAMIC POSITIONING SYSTEMS
- VESSEL MANAGEMENT SYSTEMS
- COMMUNICATION
- POWER GENERATION & DISTRIBUTION
- INTEGRATED BRIDGE SYSTEMS
- ELECTRICAL PROPULSION

SERVICE

- PROJECT MANAGEMENT
- ENGINEERING
- INSTALLATION
- SITE MANAGEMENT
- COMMISSIONING
- SPARE PARTS
- CONSULTANCY

Lorelay

SYSTEMS

- POWER GENERATION & DISTRIBUTION
- PROPULSION
- DYNAMIC POSITIONING SYSTEMS
- NAVIGATION
- VESSEL MANAGEMENT SYSTEMS

SERVICE

- ENGINEERING
- SITE MANAGEMENT
- COMMISSIONING
- PROJECT MANAGEMENT

Fjord

SYSTEMS

- NAVIGATION
- INTEGRATED BRIDGE SYSTEMS
- VESSEL MANAGEMENT SYSTEMS
- COMMUNICATION
- POWER GENERATION & DISTRIBUTION
- ELECTRICAL DRIVE SYSTEMS
- ELECTRICAL PROPULSION

SERVICE

- PROJECT MANAGEMENT
- ENGINEERING
- ELECTRICAL INSTALLATION
- SITE MANAGEMENT
- COMMISSIONING
- SPARE PARTS
- CONSULTANCY

Audacia

SYSTEMS

- NAVIGATION
- DYNAMIC POSITIONING SYSTEMS
- ELECTRICAL DRIVE SYSTEMS
- ELECTRICAL PROPULSION
- VESSEL MANAGEMENT SYSTEMS
- COMMUNICATION
- POWER GENERATION & DISTRIBUTION
- INTEGRATED BRIDGE SYSTEMS

SERVICE

- PROJECT MANAGEMENT
- ENGINEERING
- CONSULTANCY
- SITE MANAGEMENT
- COMMISSIONING
- ELECTRICAL INSTALLATION
- MAINTENANCE
- SPARE PARTS
- TRAINING

Brabo

SYSTEMS

- POWER GENERATION & DISTRIBUTION
- VESSEL MANAGEMENT SYSTEMS
- ELECTRICAL DRIVE SYSTEMS

SERVICE

- SITE MANAGEMENT
- COMMISSIONING
- PROJECT MANAGEMENT
- SPARE PARTS
- MAINTENANCE
- TRAINING
- ENGINEERING
- CONSULTANCY
- INSTALLATION

Nomad

SYSTEMS

- COMPLETE AV & IT REFIT

SERVICE

- PROJECT MANAGEMENT
- ENGINEERING
- CONSULTANCY
- SITE MANAGEMENT
- COMMISSIONING
- ELECTRICAL INSTALLATION
- MAINTENANCE
- SPARE PARTS
- TRAINING

Al Mirqab

SYSTEMS

- KALEIDESCAPE SYSTEM
- HEATING VENTILATION & AIR CONDITIONING
- AUTOMATION

SERVICE

- PROJECT MANAGEMENT
- ENGINEERING
- CONSULTANCY
- SITE MANAGEMENT
- COMMISSIONING
- ELECTRICAL INSTALLATION
- MAINTENANCE
- SPARE PARTS
- TRAINING

Drizzle

SYSTEMS

- NAVIGATION
- POWER GENERATION & DISTRIBUTION
- INTEGRATED BRIDGE SYSTEMS
- COMMUNICATION

SERVICE

- PROJECT MANAGEMENT
- ENGINEERING
- CONSULTANCY
- SITE MANAGEMENT
- COMMISSIONING
- ELECTRICAL INSTALLATION
- MAINTENANCE
- SPARE PARTS
- TRAINING

Eclipse

SYSTEMS

- HEATING VENTILATION & AIR CONDITIONING
- CHILLED WATER PLANT
- AUTOMATION
- INTEGRATED BRIDGE SYSTEMS
- SHIP MOTION CONTROL
- NAVIGATION
- COMMUNICATION

SERVICE

- INSTALLATION
- DESIGN & CONSTRUCTION
- ENGINEERING
- TRAINING
- COMMISSIONING
- PROJECT MANAGEMENT
- SITE MANAGEMENT
- MAINTENANCE
- SPARE PARTS

British Royal Fleet Auxiliary – Bay class LSD(A)

SYSTEMS

- NAVIGATION
- DYNAMIC POSITIONING SYSTEMS
- INTEGRATED PLATFORM MANAGEMENT SYSTEMS
- ELECTRICAL PROPULSION
- ELECTRICAL DRIVE SYSTEMS
- INTEGRATED BRIDGE SYSTEMS
- POWER GENERATION & DISTRIBUTION
- COMMUNICATION

SERVICE

- PROJECT MANAGEMENT
- ENGINEERING
- CONSULTANCY
- SITE MANAGEMENT
- COMMISSIONING
- ELECTRICAL INSTALLATION
- MAINTENANCE
- SPARE PARTS
- TRAINING

Royal Netherlands Navy – Johan de Witt LPD

SYSTEMS

- NAVIGATION
- HEATING VENTILATION & AIR CONDITIONING
- INTEGRATED PLATFORM MANAGEMENT SYSTEMS
- ELECTRICAL PROPULSION
- DYNAMIC POSITIONING SYSTEMS
- INTEGRATED BRIDGE SYSTEMS
- POWER GENERATION & DISTRIBUTION
- ELECTRICAL DRIVE SYSTEMS
- COMMUNICATION

SERVICE

- PROJECT MANAGEMENT
- ENGINEERING
- CONSULTANCY
- SITE MANAGEMENT
- COMMISSIONING
- ELECTRICAL INSTALLATION
- MAINTENANCE
- SPARE PARTS
- TRAINING

Royal Netherlands Navy – Holland class Patrol Vessel

SYSTEMS

- POWER GENERATION & DISTRIBUTION
- INTEGRATED BRIDGE SYSTEMS
- INTEGRATED PLATFORM MANAGEMENT SYSTEMS
- NAVIGATION
- COMMUNICATION

SERVICE

- PROJECT MANAGEMENT
- SITE MANAGEMENT
- TRAINING
- ENGINEERING
- COMMISSIONING
- SPARE PARTS
- CONSULTANCY

Royal Moroccan Navy – Sigma class Corvettes

SYSTEMS

- POWER DISTRIBUTION
- INTEGRATED BRIDGE SYSTEMS
- AUDIOVISUAL SYSTEMS
- NAVIGATION
- INTEGRATED PLAFORM MANAGEMENT SYSTEMS

SERVICE

- PROJECT MANAGEMENT
- ELECTRICAL INSTALLATION
- TRAINING
- ENGINEERING
- COMMISSIONING

Vega Diamond

SYSTEMS

NAVIGATION

COMMUNICATION

POWER GENERATION & DISTRIBUTION

SERVICE

COMMISSIONING

MAINTENANCE

Smit

SYSTEMS

- NAVIGATION
- COMMUNICATION

SERVICE

- PROJECT MANAGEMENT
- ENGINEERING
- CONSULTANCY
- SPARE PARTS
- MAINTENANCE
- COMMISSIONING

Norwegian Gem

SYSTEMS

HEATING
VENTILATION
& AIR CONDITIONING

SERVICE

DESIGN
& CONSTRUCTION

COMMISSIONING

INSTALLATION

Celebrity Solstice

SYSTEMS

HEATING
VENTILATION
& AIR CONDITIONING

SERVICE

DESIGN
& CONSTRUCTION

COMMISSIONING

INSTALLATION

Disney Dream

SYSTEMS

- HEATING VENTILATION & AIR CONDITIONING

SERVICE

- INSTALLATION
- DESIGN & CONSTRUCTION
- ENGINEERING
- TRAINING
- COMMISSIONING
- PROJECT MANAGEMENT
- SITE MANAGEMENT
- SPARE PARTS

Celebrity Reflection

SYSTEMS

- HEATING VENTILATION & AIR CONDITIONING
- CABIN CONTROL SYSTEM

SERVICE

- INSTALLATION
- DESIGN & CONSTRUCTION
- ENGINEERING
- TRAINING
- COMMISSIONING
- PROJECT MANAGEMENT
- SITE MANAGEMENT
- SPARE PARTS

Norwegian Getaway

SYSTEMS

- HEATING VENTILATION & AIR CONDITIONING

SERVICE

- INSTALLATION
- DESIGN & CONSTRUCTION
- ENGINEERING
- TRAINING
- COMMISSIONING
- PROJECT MANAGEMENT
- SITE MANAGEMENT
- MAINTENANCE
- SPARE PARTS

Imtech Marine
Sluisjesdijk 155
3087 AG Rotterdam
The Netherlands

Tel. +31 10 487 19 11
www.imtechmarine.com

- www.linkedin.com/company/imtech-marine
- twitter.com/ImtechMarine
- www.facebook.com/ImtechMarine