Sensorless Adaptive Optics OCT for In-Vivo Imaging of the Human Retina

Sense of contact 2018

Jeroen Kalkman

Department of Imaging Physics, Delft University of Technology

ImPhys
Image to insight
Insight in imaging
Department of Imaging Physics

TU Delft

Adaptive optics in astronomy

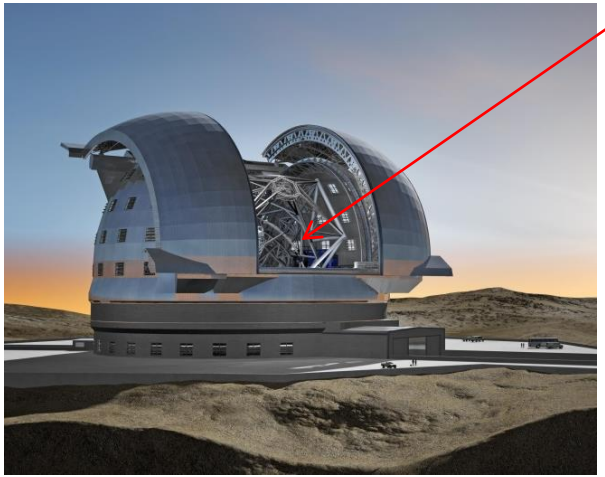

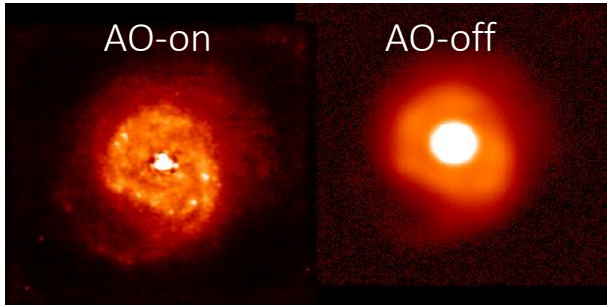

Source: Canada-France Hawaii Telescope

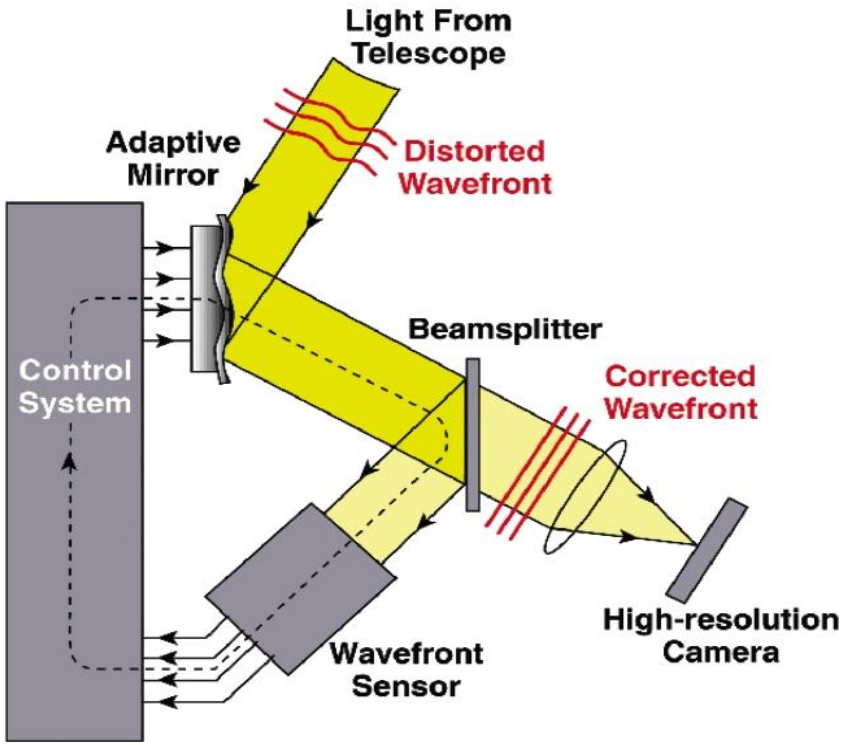

Eye aberrations

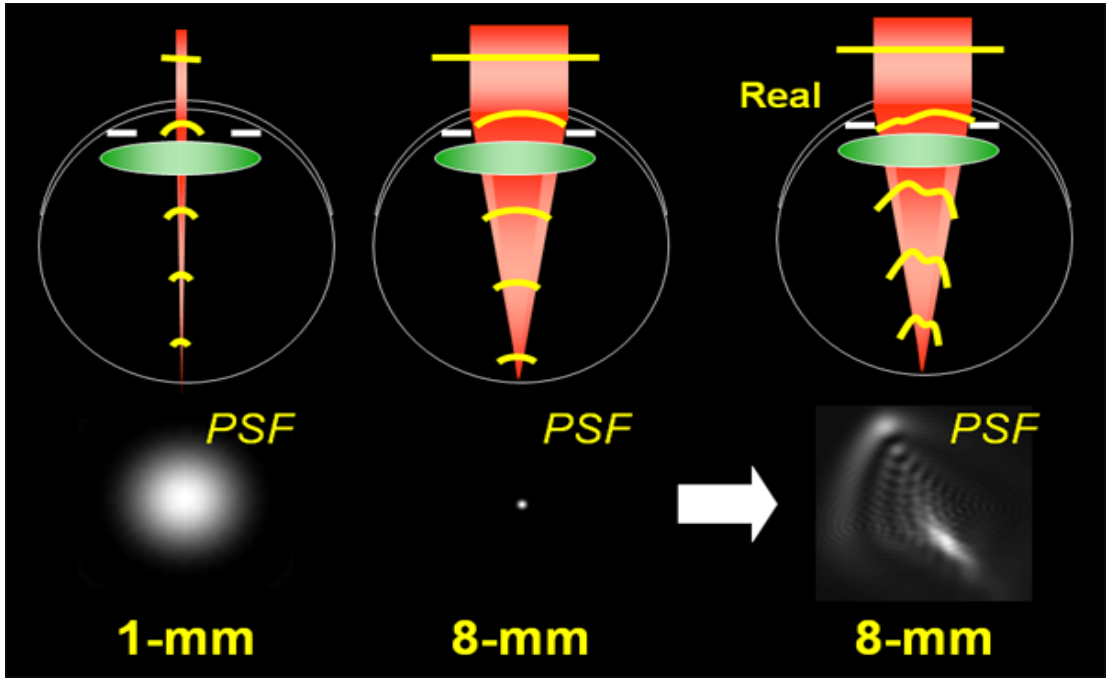

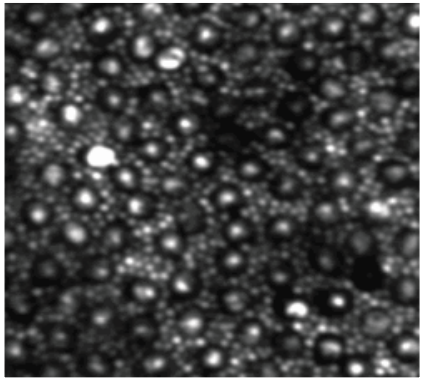

Dubra et al., Biomed. Opt. Express 2, 1864 (2011)

Adaptive optics OCT

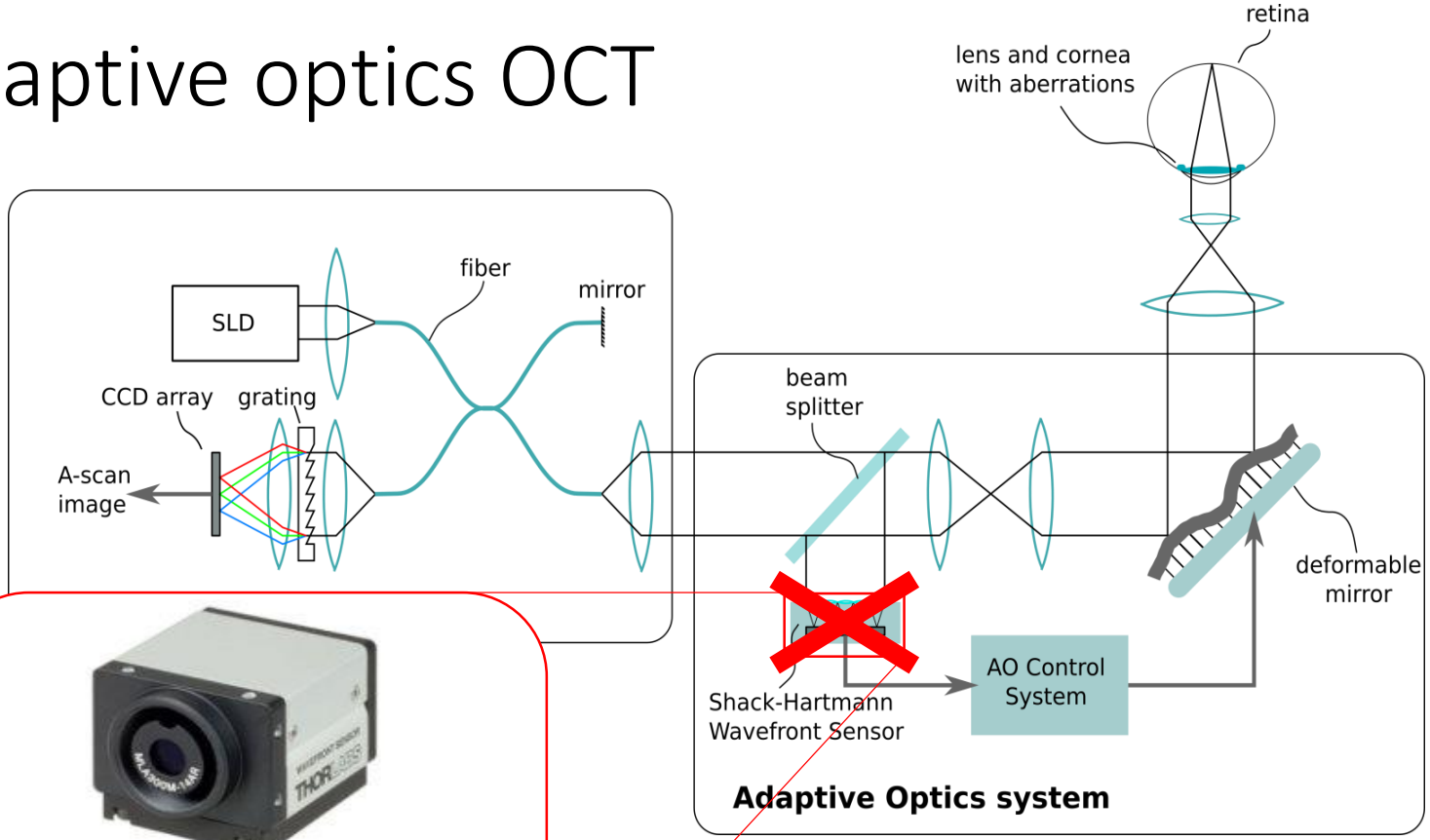

Shack-Hartmann wavefront sensor

- Speed
- Non-common path errors
- Loss of signal on science camera
- Only small aberrations measurable

Sensorless adaptive optics OCT?!

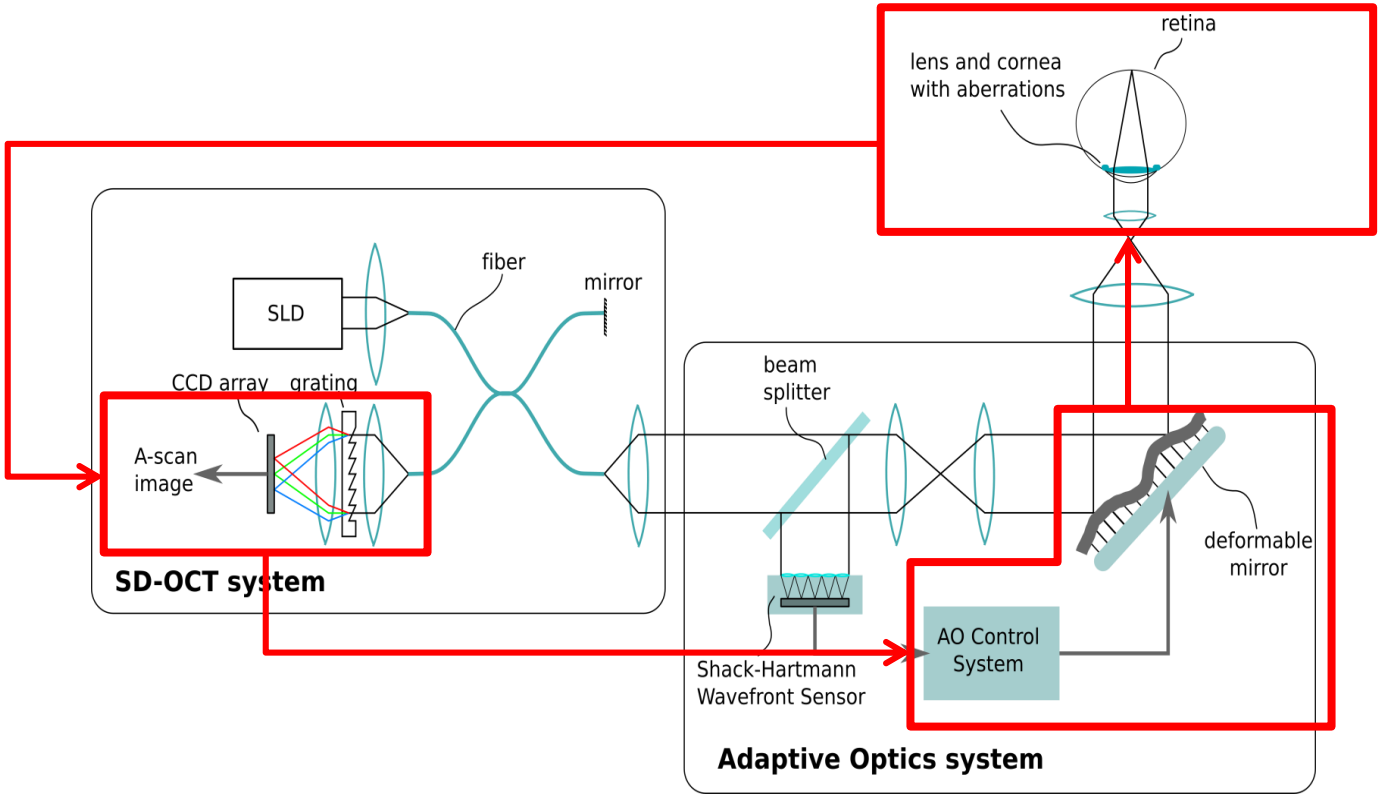

Adaptive optics OCT system

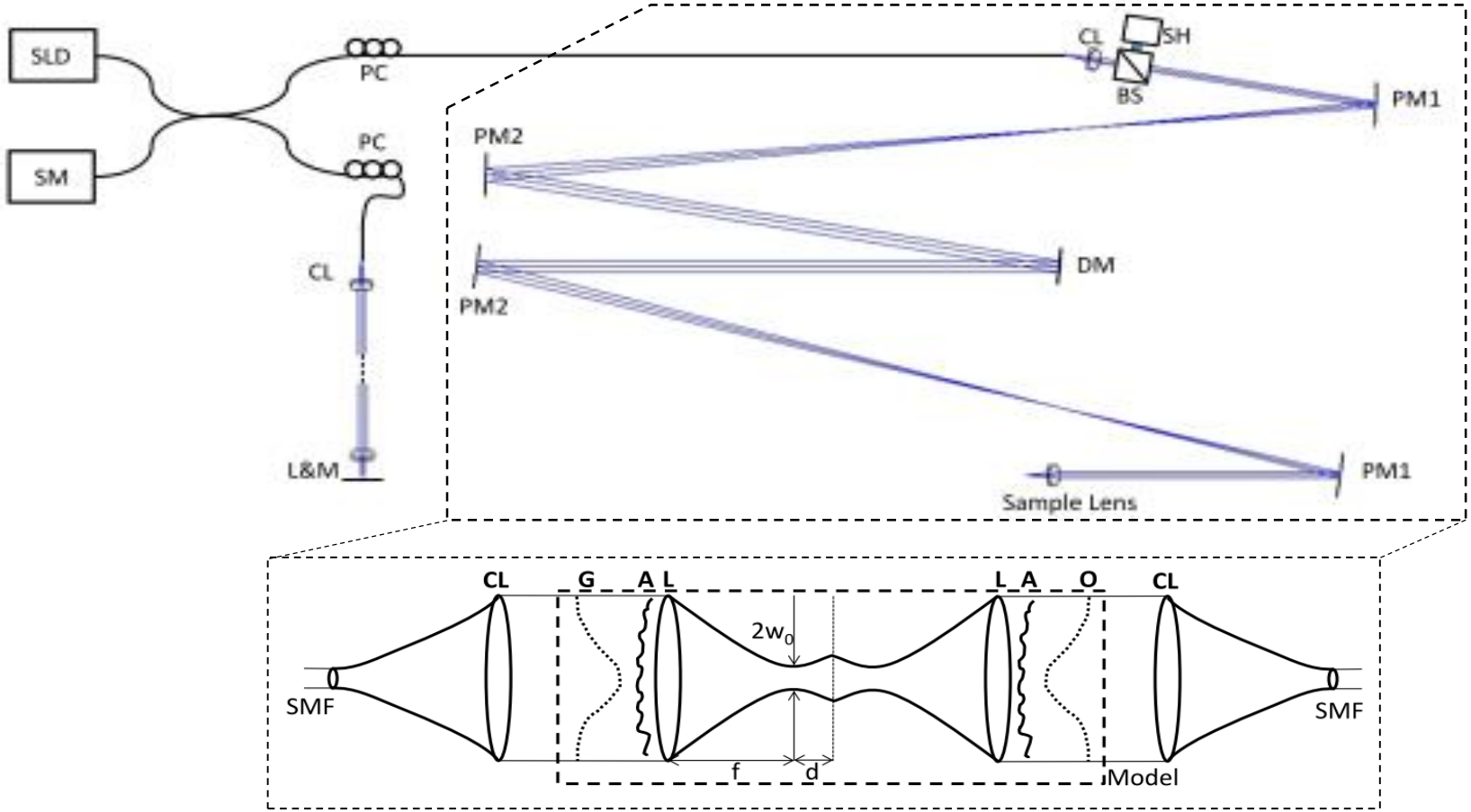

Adaptive optics OCT modeling

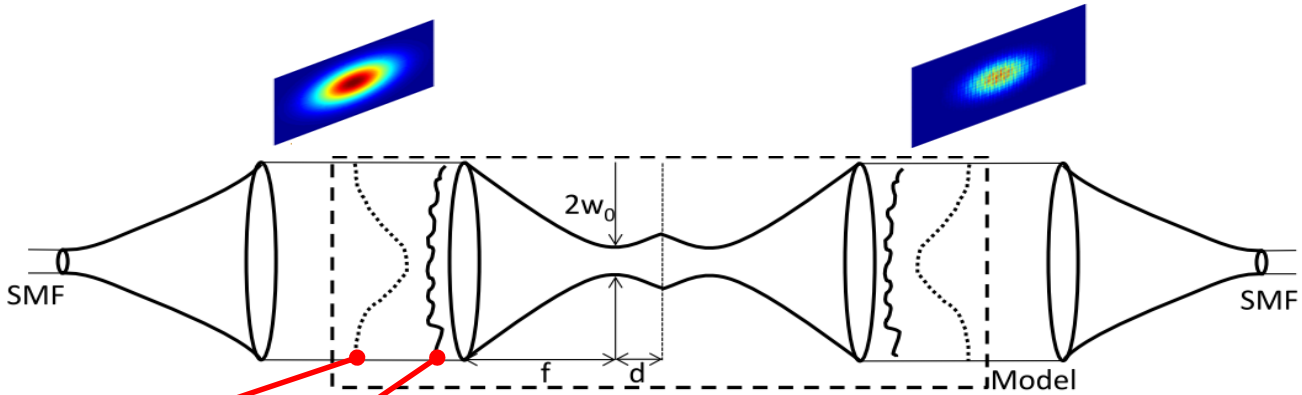

1

$$G(x,y) = C\exp\left(-\frac{1}{w^2}(x^2+y^2)\right)$$

2

$$A(x,y,\alpha) = \exp\left(ikW(x,y)\right)$$

$$W(x,y) = \alpha^T Z(x,y)$$

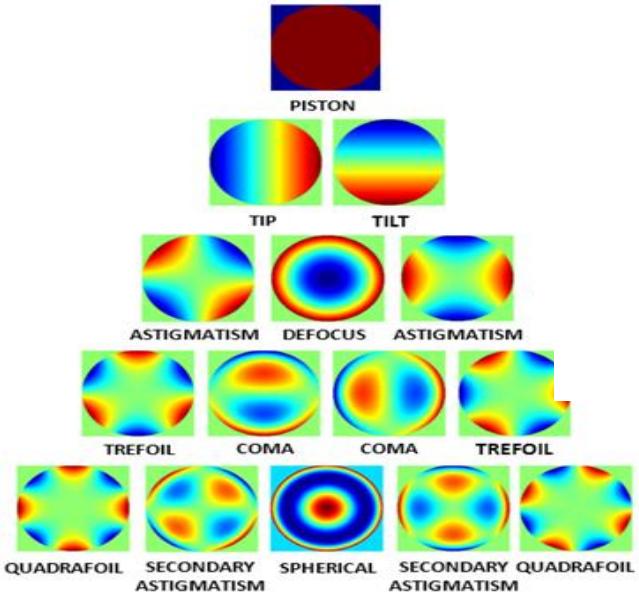

Adaptive optics OCT modeling

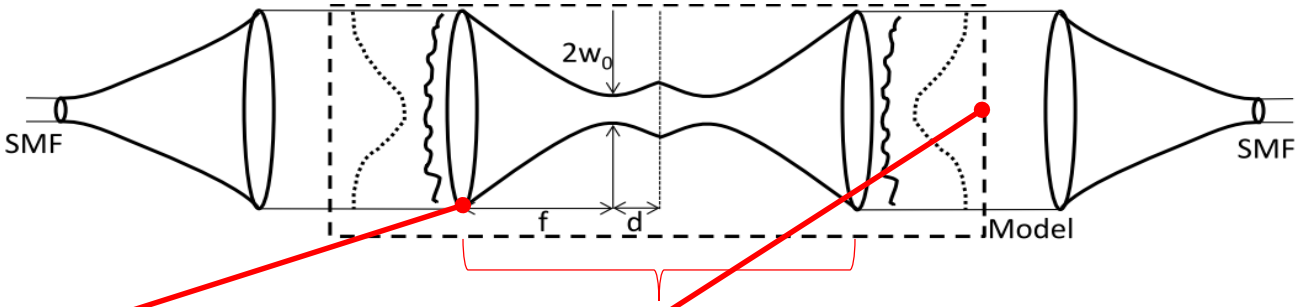

3

$$L(x,y) = \exp(-ikf)\exp\left(\frac{-ik}{2f}(x^2+y^2)\right)\operatorname{circ}\left(\frac{\sqrt{x^2+y^2}}{r_{pupil}}\right)$$

4

$$F(U(x_1,y_1),z) = \frac{\exp(ikz)}{i\lambda z}\iint U(x_1,y_1)\exp\left(\frac{ik}{2z}\left[(x_2-x_1)^2+(y_2-y_1)^2\right]\right)\mathrm{d}x_1\,\mathrm{d}y_1$$

5

$$O(U(x,y)) = \frac{\iint_{-\infty}^{\infty} U(x,y)G^*(x,y)\,\mathrm{d}x\,\mathrm{d}y}{\iint_{-\infty}^{\infty} |G(x,y)|^2\,\mathrm{d}x\,\mathrm{d}y}$$

$$\boxed{h_2(d,\alpha) = \left|O\left[U_3(x_3,y_3,d,\alpha)L(x,y)A(x,y,\alpha)\right]\right|^2}$$

OCT signal for various aberrations

Scattering model/measurements

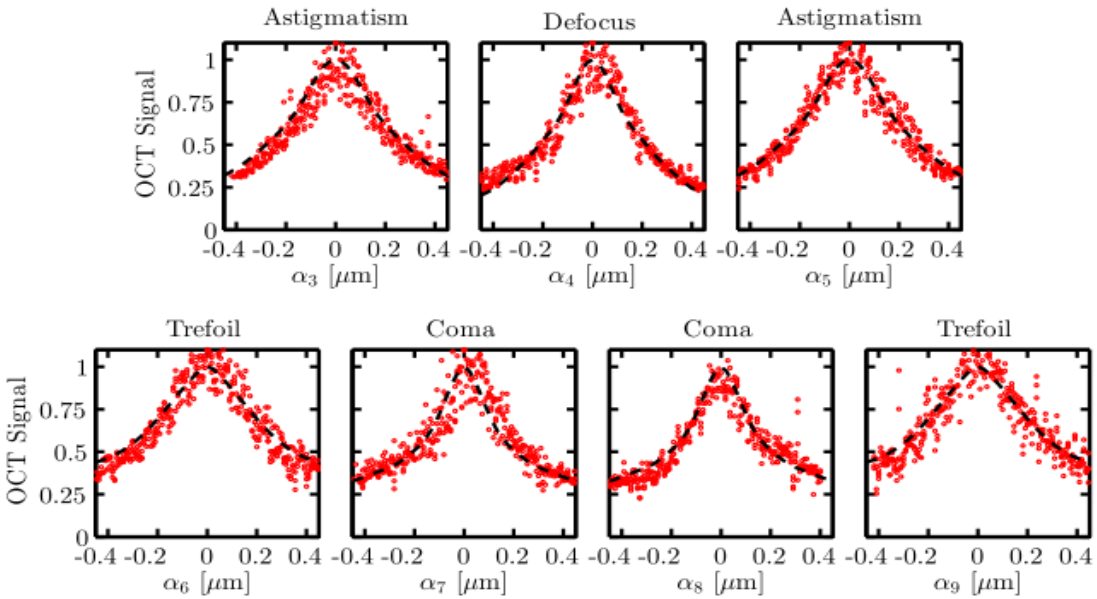

OCT signals are quasi convex with respect to aberrations

Towards model-based adaptive optics optical coherence tomography,
H.R.G.W. Verstraete, B. Cense, R. Bilderbeek, M. Verhaegen, and J. Kalkman, Optics Express 22, 32406 (2014)

Sensorless adaptive optics OCT

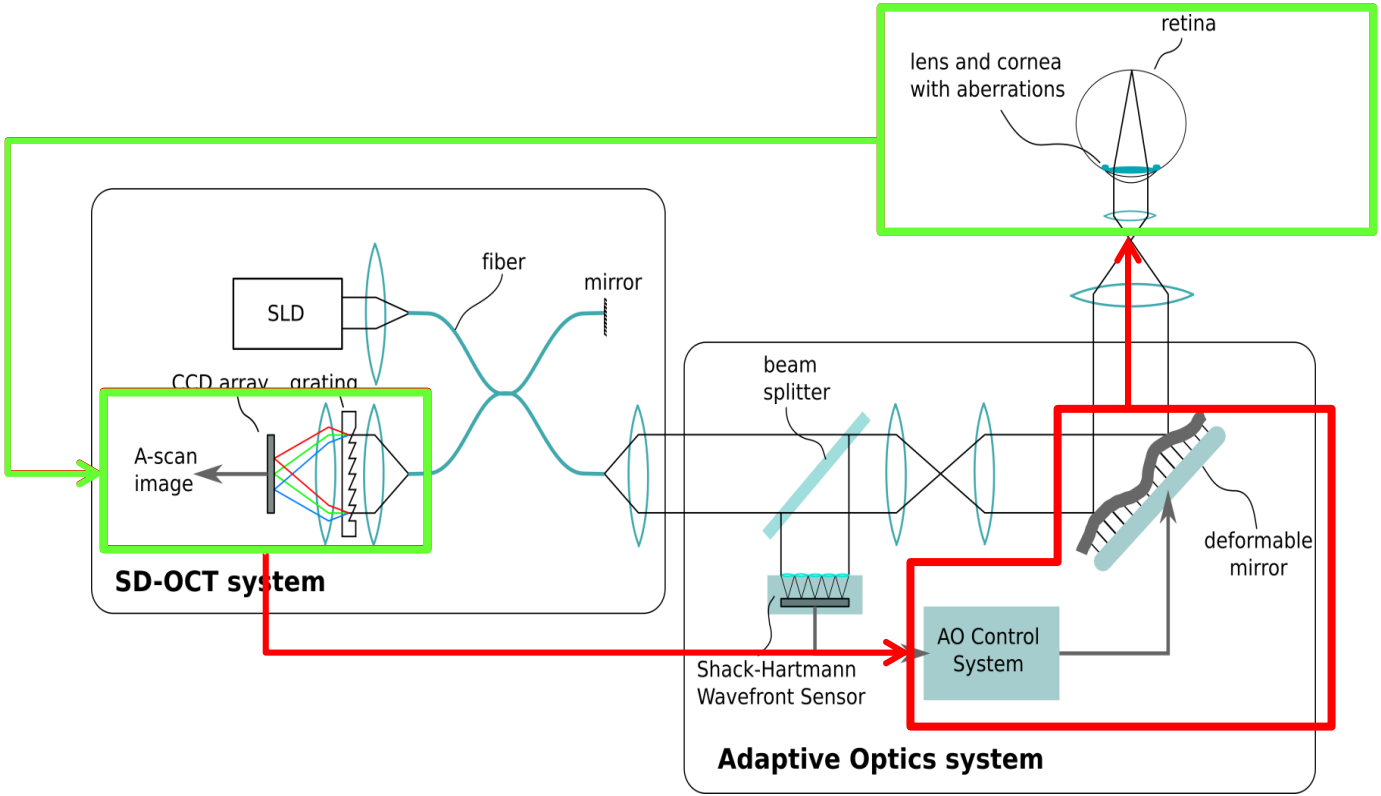

Sensorless wavefront correction

Old school: Coordinate search method

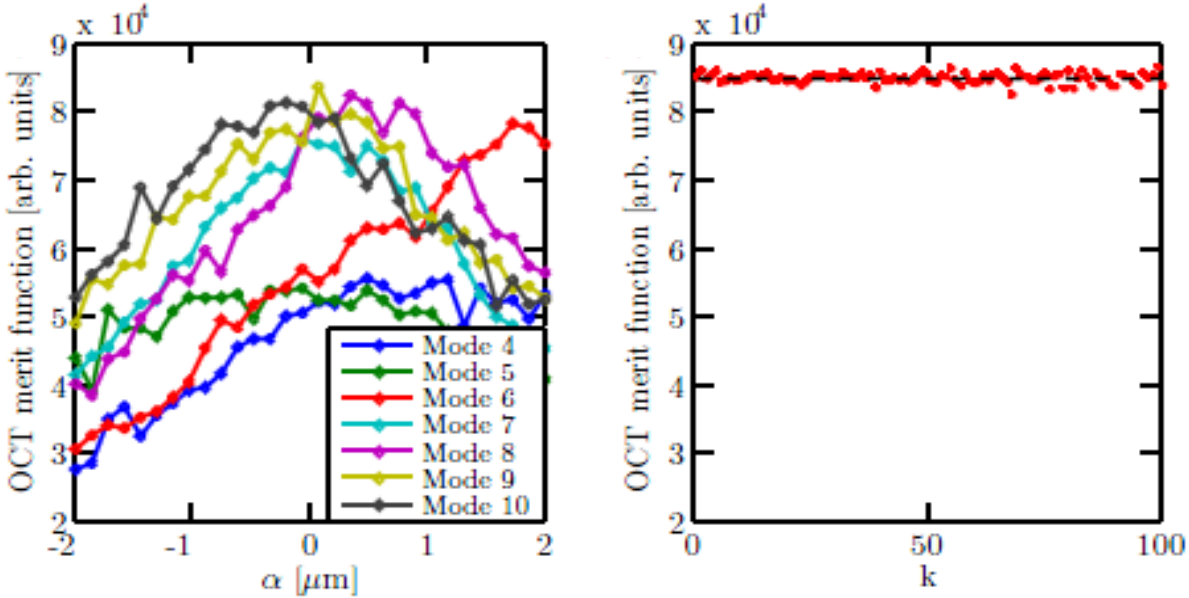

- Slow method
- Convergence succes high (unlikely to get stuck in local minima)

Sensorless wavefront correction

$$h_2(d,\alpha) = \left|O\left[U_3(x_3,y_3,d,\alpha)L(x,y)A(x,y,\alpha)\right]\right|^2$$

- Multi-dimensional function with global maximum
- Small SNR in measurements
- Derivative-based optimization very unlikely to succeed

Derivative free optimization: Data-based Online Nonlinear Extremum seeker (DONE)

$$h_2(\vec{x}) \approx \sum_{k=1}^{D} c_k \cos(\vec{\omega}_k^T \vec{x} + \theta_k)$$

randomly chosen

- Online, the model is updated with every data point
- Linearizes the optimization problem (like solving of linear set of equations)
- Extremum can be sought from fitted model, e.g., with Newton-Raphson
- All previous information is taken into account when fitting the data, i.e., better resistant to noise

DONE algorithm

Graphical representation of algorithm

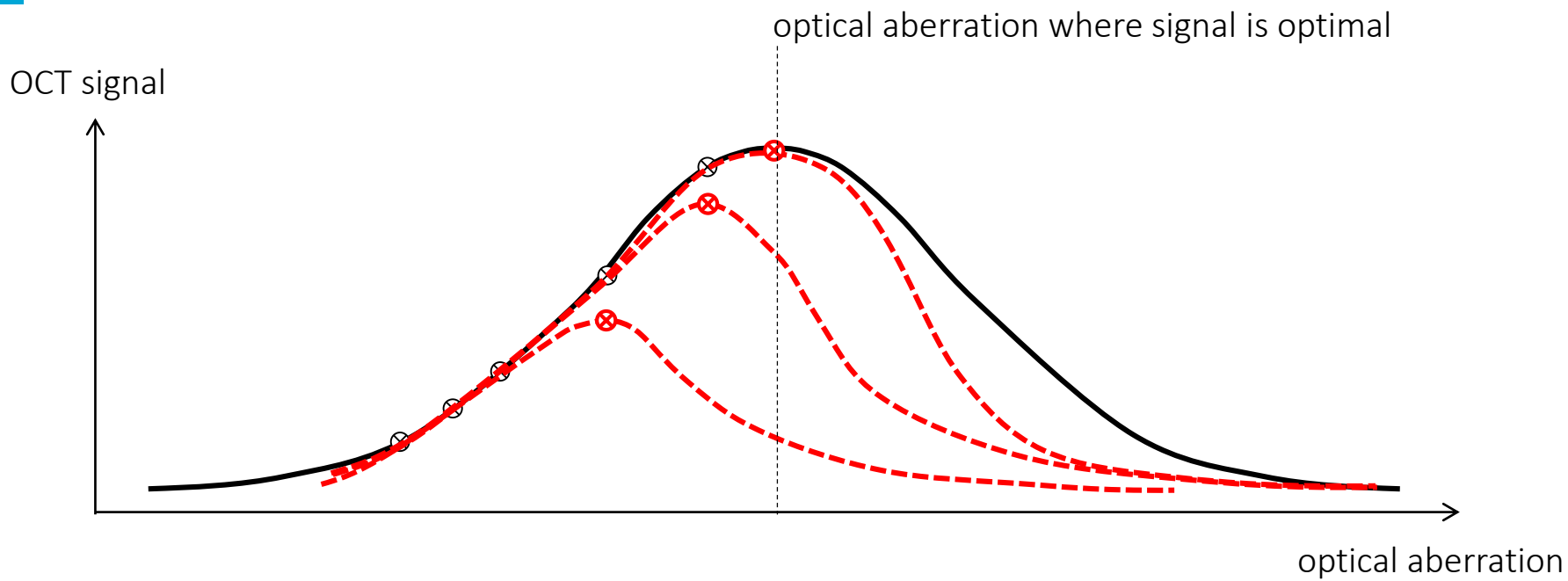

Model based sensorlesswavefront correction

Derivative free algorithms

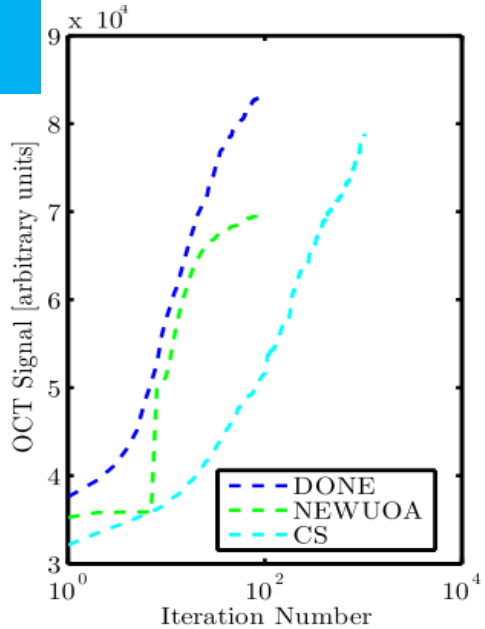

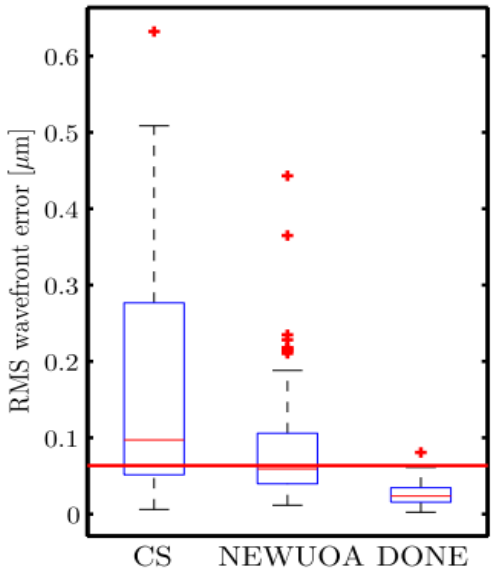

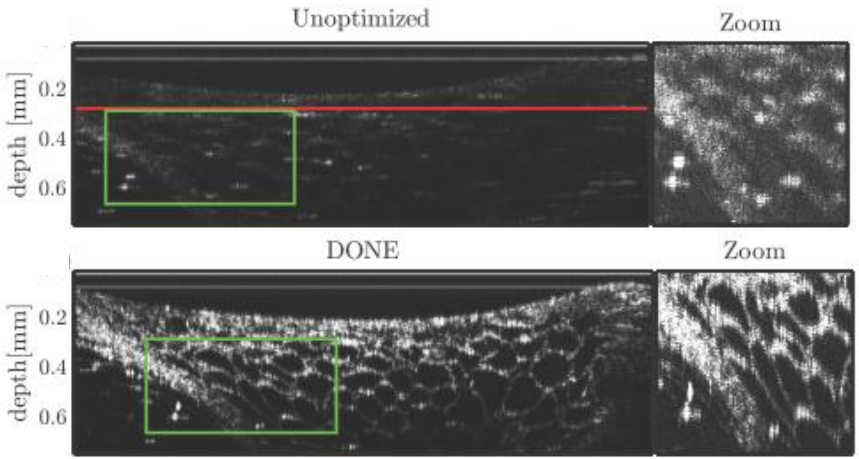

Diffraction limit

Sensorless adaptive optics OCT

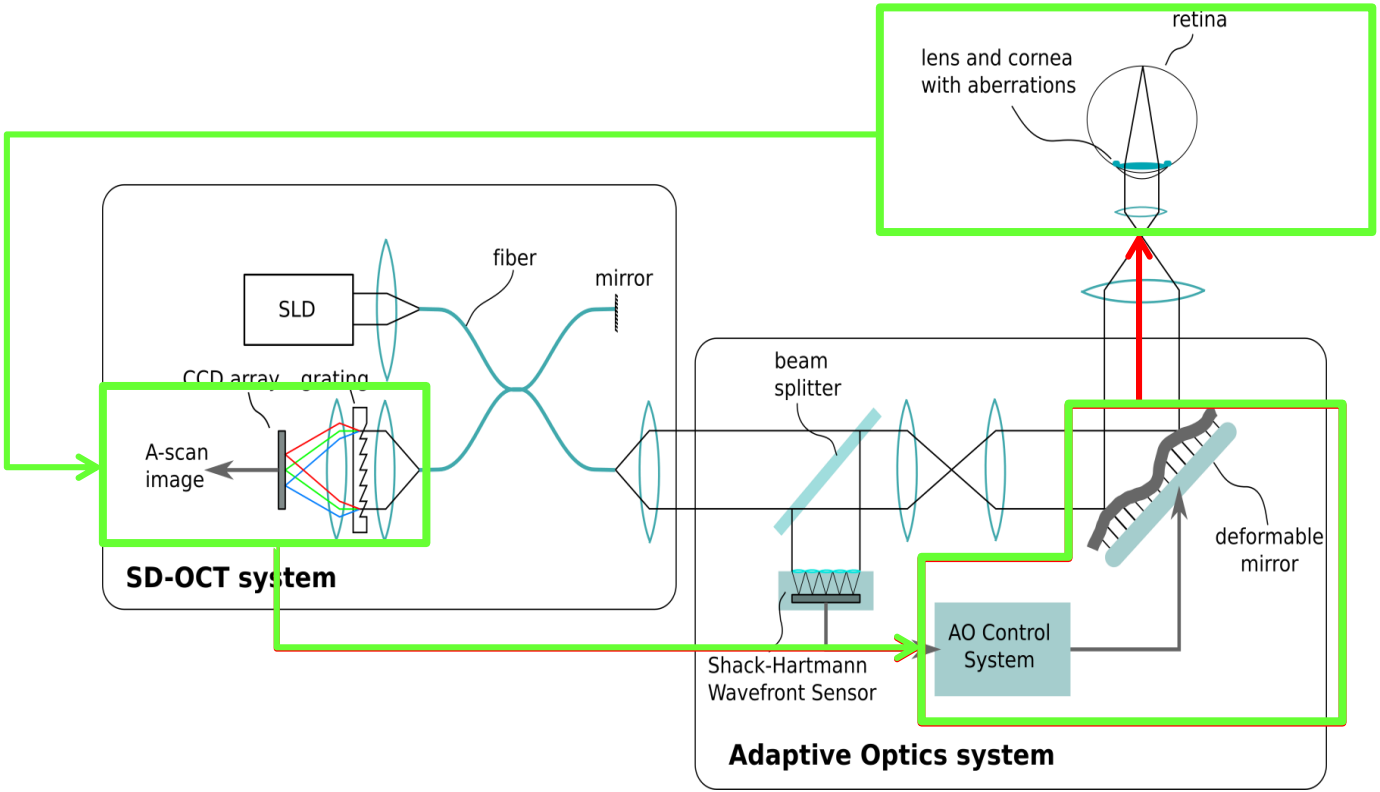

In-vivo application

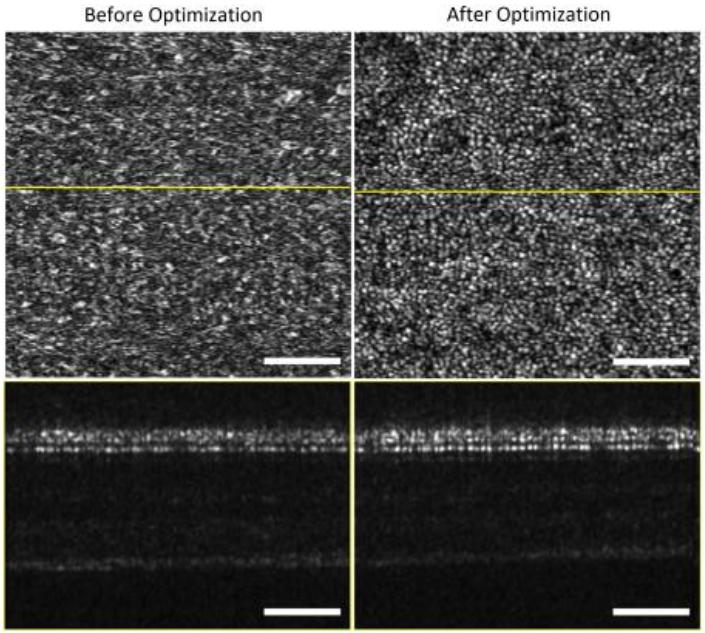

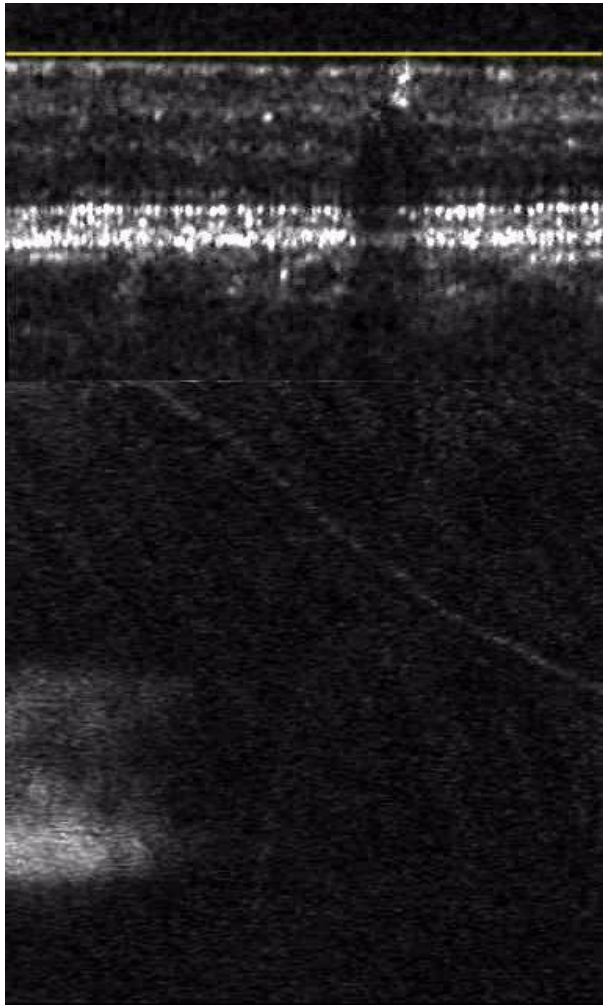

Wavefront sensorless adaptive optics OCT with the DONE algorithm for in vivo human retinal imaging, H.R.G.W. Verstraete, M. Heisler, M.J. Ju, D. Wahl, L. Bliek, J. Kalkman, S. Bonora, Y. Jian, M. Verhaegen, and M.V. Sarunic, Biomedical Optics Express **8**, 2261 (2017)

Closed-loop sensorless AO OCT

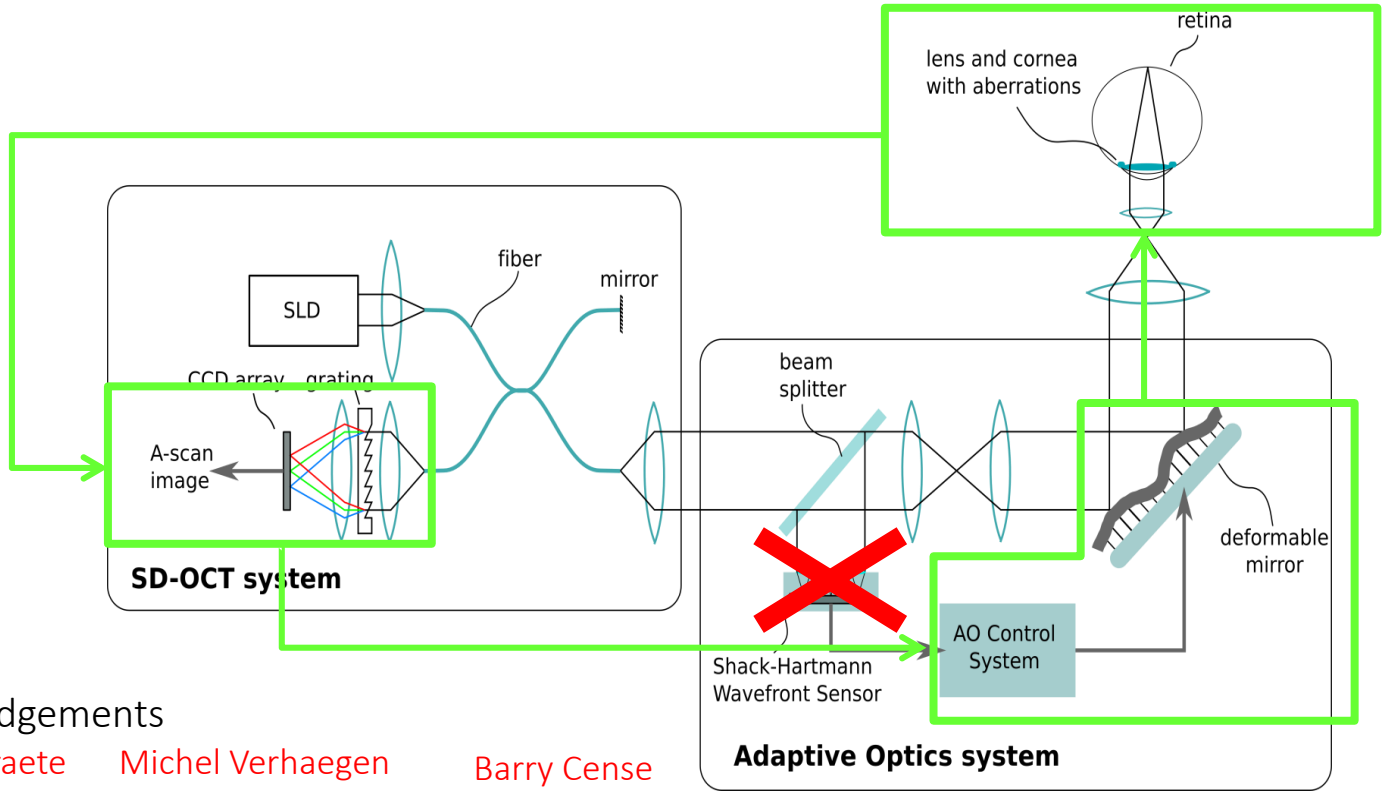

Acknowledgements

Hans Verstraete

Michel Verhaegen

Barry Cense